TABLE OF CONTENTS

RiverRun Cabinetry

DESIGN RESOURCES

- **Designer's Checklist** ..... DR1 - 2
- **NKBA Guidelines: Kitchen Planning** ..... DR3 - 5
- **NKBA Guidelines: Bathroom Planning** DR-6

GENERAL INFORMATION

- **Team Directory** GI-1
- **Getting Started** GI-3
  - New Account Set-Up GI-3
  - Online Order Site GI-3
  - Dealer Site GI-3
  - Customer Service Contact Information GI-3
- **Step-By-Step Order Process** GI-4
- **Placing Orders**
  - Online Ordering GI-5
  - Emailing 2020 Design (KIT) Files GI-5
  - Design Software Options GI-5
  - Expedited Orders GI-5
  - Cancellation Policy GI-6
  - Return Checks Policy GI-6
- **Online Order Site Quick Start Guide** GI-10
- **Shipping Program Information**
  - Cycle Ship Program GI-11
  - Calculating Freight Costs (LTL / Non-Cycle Ship) GI-11
  - Shipping Address Changes GI-11
  - Registering New Ship To Locations GI-12
  - Carriers GI-12
  - Pick Ups GI-12
  - Shipping Exclusions GI-12
  - Missed Deliveries GI-12
  - Missing Item From Delivery/Shipment GI-12
- **Damages & Warranties Replacement Program** GI-13
- **Five Year Limited Warranty** GI-14
- **Dealer Agreement Responsibilities** *** Signature Needed *** GI-15
- **Dealer Agreement Product Expectations** *** Signature Needed *** GI-16

(*continued on next page*)

Specs & Finishes

CABINET SPECS & FINISHES *(continued)*

- **General Product Notes** SF-1
- **Standard Materials and Construction Information** SF-2
- **Wall Cabinet Construction** SF-3
- **Base Cabinet Construction** SF-4
- **Door Styles & Finishes Availability** SF-5
    - Cambridge Doors SF-6
    - Jefferson Doors SF-7
    - Dalton Doors SF-8
    - Parkview Doors SF-9
    - StoneRidge Doors SF-10
    - Hampton Door SF-11
- **Door Sizes** ..... SF12 - 14
- **Drawer Front Sizes** ..... SF15 - 16
- **Cabinet & Vanity Opening Dimensions** SF-17

Custom Mods

CUSTOM MODIFICATIONS

- **Modification Descriptions & Images** ..... CM1 - 6
    - Reduced Depth (RD) CM-1
    - Increased Depth (ID) CM-1
    - Recess Toe Kick on Right <u>or</u> Left <u>or</u> Back (BTKR or L or B) CM-1
    - Recess Toe Kick on Right <u>and</u> Left (BTKRL) CM-1
    - Toe Kick Removed (BTKN) CM-2
    - Add Toe Kick to Wall with Toe Kick Space at Front Only (WTKF) CM-2
    - Add Toe Kick to Wall with Toe Kick Space to Right <u>or</u> Left (WTKR or L) CM-2
    - Add Toe Kick to Wall with Toe Kick Space to Right <u>and</u> Left (WTKRL) CM-2
    - Add Toe Kick to Wall with Toe Kick Space to Front <u>and</u> Right <u>or</u> Left (WTKFR or L) CM-2
    - Add Toe Kick to Wall with Toe Kick Space to Front, Right <u>and</u> Left (WTKFRL) CM-3
    - Tri-Pack: Face Frame, Drawer Front and Door Only (TP) CM-3
    - Box Only (BO) CM-3
    - No Fronts (NOFRONTS) CM-3
    - Finished Interior (FI) CM-3
    - Finished Interior Tall (FIT) CM-4
    - Pipe Chase Cut-Out on Right <u>or</u> Left Corner (PCR or L) CM-4
    - Pipe Chase Cut-Out on Middle (PCM) CM-4
    - Install Extended Stile on Right <u>or</u> Left (ESR or L) CM-4
    - Install Extended Stile on Right <u>and</u> Left (ESRL) CM-4
    - Peninsula Cabinet (PN) CM-5
    - Wall End Panels (WEP) & Base End Panels (BEP) Factory Installed CM-5

(continued on next page)

CUSTOM MODIFICATIONS *(continued)*

- Install Full Depth Shelf (FDS) CM-5
- Install Second Shelf (2SH) CM-5
- Prep For Glass (PG) CM-5
- Reversed Base Cabinet Drawer (BD) CM-6
- Finished Ends CM-6
- Sink Base (SB) CM-6
- Dovetail Drawer Box CM-6

- **Summary Modifications & List Prices** ..... CM7 - 8

WALL CABINETS

- Wall Cabinets ..... W1 - 6
- Corner Wall Cabinets ..... W7 - 9
- Blind Wall Cabinets ..... W10 - 11
- **Specialty Wall Cabinets** ..... W12 - 16
  - Quarter Round Cabinets W-12
  - Microwave Wall Cabinets ..... W12 - 13
  - Appliance Garage Cabinets W-14
  - Wine Racks and Cubbies W-14
  - Wall Organizers W-14
  - Floating Shelves W-15
  - Wall End Panels W-15
  - Wall End Panel Kits & Doors W-15
  - Mullion Doors W-16

BASE CABINETS

- Base Cabinets ..... B1 - 2
- Sink Base Cabinets ..... B2 - 3
- Easy Reach Cabinets B-4
- Blind Base Cabinets B-5
- **Specialty Base Cabinets** ..... B-6 - 9
  - Base Microwave Cabinets B-6
  - Drawer Base Cabinets ..... B-6 - 7
  - Transitional Angled Base Cabinet B-8
  - Window Seat Base Cabinets B-8
  - File Drawer B-8
  - Vanity Lap Drawer B-9
  - Base End Panel Door B-9
  - Base End Panel Kit B-9

(*continued on next page*)

VANITY CABINETS

- Vanity Base Cabinets ..... V1 - 3

TALL CABINETS

- Utility Cabinets T-1
- Double Oven Cabinet T-2
- Bookcases ..... T3 - 4

ACCESSORIES

- Mouldings & Accents - Decorative Accents ..... A1 - 2
- Crown Mouldings A-3
- Mouldings & Accents - Decorative Accents ..... A4 - 5
- Fillers ..... A5 - 7
- Panels ..... A7 - 8
- Toe Kick Cover A-9
- Shelf Material A-9
- Skins A-9
- Floating Shelves A-10
- Roll Out Trays A-10
- Pilaster Kits A-10
- Hoods A-11
- **Accessories - Installed** ..... A12 - 16
    - Lazy Susans ..... A12 - 13
    - Tilt Out Trays A-13
    - Utensil Organizers & Cutlery Trays ..... A13 - 14
    - Spice Organizers A-14
    - Waster Containers A-15
    - Base Organizers A15-16
    - Mixer Lift A-16
- **Accessories - Not Installed** ..... A17 - 20
    - Base Drip Tray A-17
    - Wall Filler Pull-Outs ..... A17 - 18
    - Base Filler Pull-Outs A-18
    - Base Organizers & Accessories ..... A19 - 20
    - Chrome Tray Dividers A-20
    - Repair Items ..... A21 - 22
    - Sales Aids ..... A23 - 24
- **Finishing Program** A-25
- **Osborne Wood Products Program** A-26

(*continued on next page*)

FORMS

- Email Registration F-1
- Custom Quote Form F-2
- Homeowner Warranty Registration F-3

DESIGNER'S CHECKLIST

River Run Cabinetry

Construction Options

Cabinets with plywood ends are unfinished on the exterior, consider the following solutions for exposed exterior ends:

- ☐ Order finished ends
- ☐ Apply ¼" veneer skin to hide ¼" reveal. This will allow the ends to age uniformly with the rest of the kitchen and will make it flush.
- ☐ Apply decorative door kit. This kit includes ¼" veneer skin and decorative door.

Wood and Finish Characteristics

Review specific details with the Customer:

- ☐ Mineral Streaks, Birdseye Dots, Grain Variations
- ☐ Color Variations/Darkening
- ☐ Finish variations, hairline cracks may develop at frame joints on painted frame.
- ☐ Underside of cabinets are natural maple laminate. Use light rail or cabinet panel edge and skin to hide, especially when designing with peninsula wall cabinets.

Organization

Review storage and usage needs with Customer:

- ☐ Cooking Solutions:
  - Wall Spice Rack Cabinet
  - Two-Drawer Bases for Cookware
  - Mixer Lift with Solid Wood Shelf
- ☐ Storage Solutions:
  - Pegged Dish Organizer
  - 2-Tier Blind Base Pullout
  - Lazy Susans
  - Roll-Out Trays
- ☐ Clean-up Center:
  - Base Trashcan
  - Sink Base Drip Trays
  - Tilt-Out Trays

Clearances

- ☐ Add fillers between end cabinets and walls
- ☐ Allow space between door/winder trim and end cabinets for countertop and top moulding overhang.
- ☐ Include refrigerator door hinges in overall refrigerator height when placing cabinets above it.

Maintain a minimum clearance of 3" by pulling blind corners as follows:

- ☐ 1 ¼" for full overlay cabinets (More is needed in certain situations such as when adjacent to an appliance or when using oversized pulls or knobs.)
- ☐ Allow sufficient clearance (3") on each side of accessory cabinets (such as roll-out trays, etc.) Doors on these cabinets must open fully for accessories to be functional.
- ☐ Ensure the height between the cooktop and range hood is 24" to meet NKBA guidelines.

Qualify customer carefully on upper cabinet/microwave advantages/disadvantages as follows:

- ☐ Minimum of 18" from cooktop to upper cabinet/above the range microwave which allows for easy access to either , but less room over back burner.
- ☐ Minimum of 21" from cooktop to upper cabinet/microwave which allows for access to large pots on back burner of cooktop, but longer reach to microwave.

(continued on next page)

Varying Heights and Depths

- ☐ Increase the depth of a wall cabinet run when you increase the height (so moulding on adjacent cabinet will fall into the side of the taller cabinet).
- ☐ Skin the sides of tall cabinets to 1.) hide the seam between the toekick pedestal and the cabinet, 2.) keep adjacent base and wall cabinets out from reveal of tall cabinet.
- ☐ Add increased depth on tall end panels for a built-in look for deep refrigerators.
- ☐ Account for the additional support needed for wall cabinets with a depth of 18" or greater. This can be achieved by installing end panels.

Fillers

- ☐ If fillers are needed, place them at the end of a run where they will be less noticeable.
- ☐ Attach overlay fillers on top of the base, wall, or tall fillers when using full overlay door style to maintain a consistent reveal. Don't forget to include blind corner fillers.
- ☐ Add a filler at least 6" wide to accommodate a decorative overlay when the filler is used as a valance.

NKBA GUIDELINES: KITCHEN PLANNING

River Run Cabinetry

Door/Entry

- Door opening should be at least 32″ wide, requiring a minimum 2′ 10″ wide door.

Door Interference

- Entry door should not interfere with safe appliance operation or appliance doors.

Distance Between Work Centers

- With three work centers, the total distance traveled should not be more than 26″ with no single leg of the triangle less than 4′ or more than 9′
- With more than three work centers, each additional travel distance to another work center should be no less than 4′ or more than 9′. Each leg is measured from the center-front of the appliance/sink. No work triangle leg should intersect an island/ peninsula by more than 12″.

Separating Work Centers

- A tall obstacle should not separate two primary work centers. A properly recessed tall corner unit is acceptable.

Work Triangle Traffic

- Major traffic patterns should not cross through the basic work triangle.

Work Aisle

- The work aisle should be at least 42″ for one cook and at least 48″ for multiple cooks.

Walkway

- The walkway width should be at least 36″.

Traffic Clearance at Seating

- Allow 32″ of clearance from the table to wall/ obstacle if no traffic passes behind a seated diner. If traffic passes behind the diner, allow at least 36″ to edge past or 44″ to walk past.

Seating Clearance

- 30″ high tables/counters should allow a 24″ wide by 18″ deep space for each seated diner and at least 18″ knee space.
- 36″ high counters should allow a 24″ wide by 15″ deep space for each seated diner and at least 15″ kneespace.
- 42″ high counters should allow a 24″ wide by 12″ deep space for each seated diner and at least 12″ kneespace.

Clean-Up/Prep Sink Placement

- With only one sink, locate it adjacent to or across from the cooking surface and refrigerator.

Clean-Up/Prep Sink Landing Area

- Include at least a 24″ wide landing space on one side of the sink and 18″ on the other.
- If all the countertop at the sink is not the same height, plan a 24″ landing space on one side of the sink and 3′ of countertop frontage on the other, both at the same height of the sink.

Preparation/Work Area

- Include a section of countertop at least 36″ wide x 24″ deep next to the sink for a work area.

(continued on next page)

Dishwasher Placement

- Nearest edge of dishwasher should be within 36" of nearest edge of sink. Provide at least 21" of standing space between the edge of the dishwasher and countertop frontage/appliances/cabinets which are placed at a right angle to the dishwasher.

Waste Receptacles

- Include at least 2 waste receptacles, one near the sink and the other nearby for recycling.

Auxiliary Sink

- Provide at least 3' of countertop frontage on one side of the auxiliary sink and 18" on the other side, both at the same height as the sink.

Refrigerator Landing Area

- Include at least 15" of landing area on the handle side of the refrigerator, 15" on either side of a side-by-side refrigerator, 15" of landing space which is no more than 48" across from the front of the refrigerator, and 15" above or adjacent to any under-counter style refrigerator.

Cooking Surface Landing Area

- Include a minimum of 12" of landing area on one side of the cooking surface and 15" on the other.
- If cooking surface is at a different countertop height than the rest of the kitchen, then the 12" and 15" landing areas must be the same height as the cooking surface.
- For safety reasons, in an island or peninsula situation, the countertop should extend a minimum of 9" behind the cooking surface if the counter height is the same height as the cooking surface.

Cooking Surface Clearance

- Allow 24" between the cooking surface and a protected noncombustible surface above it.
- At least 30"of clearance is required between the cooking surface and an unprotected/combustible surface above it.
- If a microwave/hood combination is used, then the manufacturer's specifications should be followed.

Cooking Surface Ventilation

- A correctly sized, ducted ventilation system is recommended for all cooking surface appliances. The recommended minimum is 150 CFM.
- Code requires that the manufacturer's specifications be followed. Minimum exhaust rate for a ducted hood is 100 CFM and must be ducted to the outside.
- Make-up air may need to be provided. Refer to local codes.

Cooking Surface Safety

- Do not locate cooking surface under an operable window.
- Window treatments above cooking surface should not use flammable materials.
- Place a fire extinguisher near the kitchen exit away from cooking equipment.

Microwave Oven Placement

- The ideal location for the bottom of the microwave is 3" below the principle user's shoulder, but no more than 54" above the floor.

Microwave Landing Area

- Provide at least 15" above, below, or adjacent to the handle side of a microwave oven.

Oven Landing Area

- Include at least 15" next to or above the oven.
- A 15" landing area that is not more than 48" away is also acceptable as long as the oven does not open into a walkway.

Combining Landing Areas

- If two landing areas are adjacent to one another, determine a new minimum for the two by taking the longer of the two and adding 12"

Countertop Space

- A total of 158" of countertop frontage, 24" deep, with at least 15" clearance above is needed to accommodate all landing, preparation, work, and storage areas.

(continued on next page)

Countertop Edges

- Clipped or round corners, rather than sharp edges, are recommended on all counters.

Storage

- The recommended total shelf/drawer frontage for a small kitchen (less than 150 square feet) is 1400", for a medium kitchen (151 to 350 square feet) is 1700", and for a large kitchen (greater than 350 square feet) is 2000"

Sizes:	S	M	L
Wall	300"	360"	360"
Base	520"	615"	660"
Drawer	360"	400"	525"
Pantry	180"	230"	310"
Misc.	40"	95"	145"

- The totals for wall, base, drawer, and pantry shelf/drawer frontage can be adjusted upward or downward as long as the recommended total stays the same.

Storage at Clean-Up/Prep Sink

- The recommended total for a small kitchen is 400", a medium kitchen is 480", a large kitchen is 560", and should be located within 72" of the centerline of the main clean-up/prep sink.

Corner Cabinet Storage

- At least one corner cabinet should include a functional storage device.

Electrical Receptacles

- GFCI (Ground-Fault-Circuit-Interrupter) protection is required on all receptacles servicing countertop surfaces within the kitchen.

Lighting

- Every work surface should be well illuminated. At least one wall switch-controlled light must be placed at the entrance.
- Window/skylight area, equal to at least 8% of the total square footage of the kitchen, or a total living space which includes a kitchen, is required.

NKBA GUIDELINES: BATHROOM PLANNING

RiverRun Cabinetry

Door/Entry

- Doorway opening should be at least 32", requiring a minimum 2' 10" wide door.

Door Interference

- The door area should include clear floor space for maneuvering which varies according to the type of door and the direction of the approach.

Ceiling Height

- Bathroom floor to ceiling minimum height is 80". A shower or tub with a shower head shall have a minimum floor to ceiling height of 80" above a minimum area 30" x 30" at the shower head.

Clear Space

- Plan a clear space of 30" from the front edge of all fixtures to any opposite bath fixture, wall, or obstacle.
- A minimum space of at least 21" is required in front of a lavatory, toilet, bidet, and tub, with a 24" minimum space in front of a shower entry.

Single Lavatory Placement

- The distance from the centerline of the lavatory to the sidewall/tall obstacle should be at least 20".
- The minimum distance required is 15". The minimum distance required between a wall and the edge of a lavatory is 4".

Double Lavatory Placement

- The distance between the centerlines of two lavatories should be at least 36".
- The minimum distance required is 30".
- The minimum distance required between the edges of two lavatories is 4".

Lavatory/Vanity Height

- The height for a lavatory varies from 32" to 43" to fit the user.

Countertop Edges

- Clipped or round corners, rather than sharp edges, are recommended on all counters.

Shower Size

- The interior shower size should be at least 36" x 36". The minimum interior showersize required is 30" x 30".

Storage

- Provide adequate, accessible storage for toiletries, bath linens, grooming and general bathroom supplies.
- Storage of frequently used items should be 15" to 48" above floor.

Electrical Receptacles

- All GFCI receptacles should be located at electrical appliance points of use.

Load bearing floors and shelves meet KCMA standards of 15 lbs. per square foot. Warranty does not cover overloading beyond this point.

To view a complete and updated list of the NKBA Guidelines, visit: http://www.nkba.org/guidelines/default.aspx

TEAM DIRECTORY

GENERAL INFORMATION

NAME	TITLE/RESPONSIBILITY	EXT	EMAIL
Customer Service	General Inquiries	540-438-5973	CustomerService@RiverRunCabinetry.com
Order Inquiries	(for items not on Online Order Site)		Order@RiverRunCabinetry.com
2020 Kit File Order	Submitting 2020 KIT files/orders		2020Order@RiverRunCabinetry.com

CUSTOMER SERVICE

Kimberly Goodman	Customer Service Manager	463	KGoodman@RiverRunCabinetry.com
Dawn Edwards	Customer Service Rep	464	DEdwards@ClassicDistribution.us

SHIPPING

Alex Arevalo	Shipping Supervisor	323	AArevalo@ClassicDistribution.us

ACCOUNTING

Dung Nguyen	Financial Controller	316	DNguyen@ClassicDistribution.us
Ramona "Mona" Moyers	Jr. Accountant (AR/AP)	444	RMoyers@ClassicDistribution.us

MARKETING

Carol Swinehart	Marketing Manager	433	CSwinehart@ClassicDistribution.us

GETTING STARTED

River Run Cabinetry

NEW ACCOUNT SET-UP

- Once your dealer application is approved, you will receive an email with instructions for accessing both the **Online Order site** and the **Dealer site**.
- **Note:** These are two different sites. The Dealer site is accessed through the Online Order site.

ONLINE ORDER SITE

Website: *Orders.RiverRunCabinetry.com*

- Use this site to create quotes and submit orders.
- After your account is approved, you'll receive a **Welcome Email** with your **Dealer Code**.
- Before logging in for the first time, click **"Register Here"** and complete the form using your Dealer Code.
- See the **Order Process** section of this binder for more details.

DEALER SITE

Access: Through the Online Order Site – under the **"Dealer Tools"** menu in the top navigation bar.

- Use the Dealer site to access:
  - 2020 Design Catalog
  - SpecBook (PDF and online versions)
  - Archived email notifications
  - Current promotions
  - Additional resources

CUSTOMER SERVICE CONTACT INFO:

Phone: 540-438-5973
Email: CustomerService@RiverRunCabinetry.com

STEP-BY-STEP ORDER PROCESS

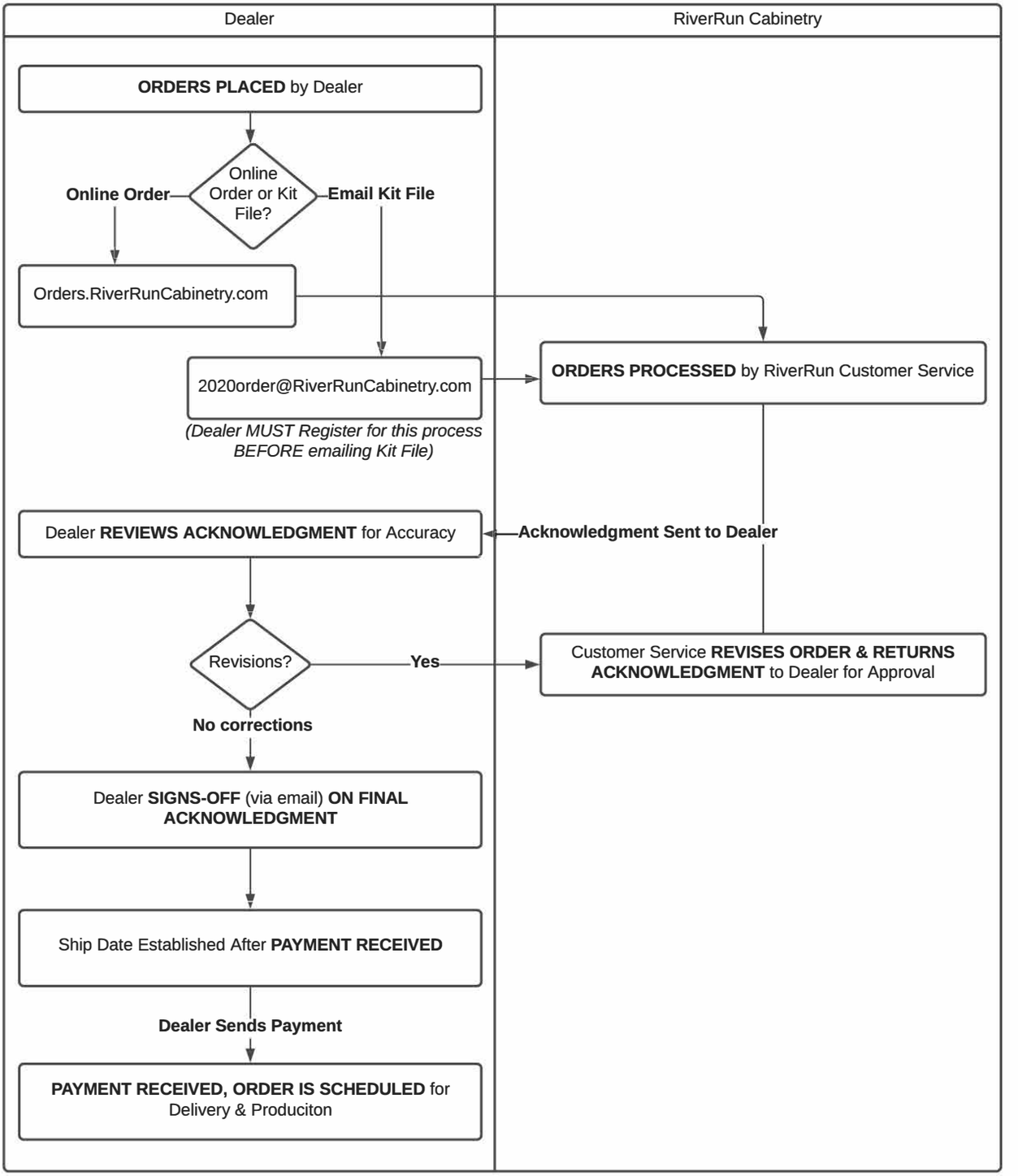

PLACING ORDERS

RiverRun Cabinetry

ONLINE ORDERING

- Visit: ***orders.riverruncabinetry.com***
- Our Online Order Site was designed to work seemlessly with 2020 Insight, our ERP system, and the 2020 Design software.
- First time users of the new site, MUST click "register here" before logging in. Old accounts from the previous site will not work. Your DEALER CODE is needed to complete the registration form. (The Dealer Code was emailed to the dealer when the account was originally set up.) Contact Customer Service if you do not have your Dealer Code.
- A *Quick Start Reference Guide* (PDF), located on the Dealer site and on page GI-7 of this SpecBook. It is a useful tool to guide you through the new Online Order site.

EMAILING 2020 DESIGN (KIT) FILES

- Dealers need to email Carol Swinehart at *cswinehart@classicdistribution.us* the following information on each person/designer that will be sending 2020 KIT files as RiverRun orders:
  - Name (First and Last)
  - Email address
  - Company Name
- RiverRun staff will set up these contacts to be able to place orders. Dealers will be notified when they are able to place their first order, via their 2020 KIT file.
- Designers <u>must</u> use the most recent RiverRun/2020 Design catalog available. See the Dealer site for the most recent catalog.
- Approved dealers should send 2020 KIT file orders to: ***2020order@riverruncabinetry.com***

DESIGN SOFTWARE OPTIONS

- 2020 Catalog is available on our Dealer site. Go to the 2020 Catalog link in the main menu for a link to the latest catalog.
- ProKitchen Catalog is available on the ProKitchen website at: ***https://www.prokitchensoftware.com/prokitchen-online/conf/riverrun***.

EXPEDITE ORDERS

- Depending on current production demands, RiverRun may not be able to expedite orders during certain periods of the year. Contact Customer Service to see if your order can be expedited.
- There is a 30% upcharge for these orders.

RETURNS & CANCELLATIONS

- Once an order is approved and has not been placed into production there will be a 25% change fee added to the item/items being changed.
- Order cancellations and/or changes will not be accepted after an order has been placed into production.
- Any item with standard modifications or custom cabinets may not be changed once approved.
- Unpaid orders will be canceled after 3 weeks.
- Returns are not accepted.

RETURNED CHECKS POLICY

- Insufficient funds payment returns will incur a $30 processing fee.

ONLINE ORDER SITE: QUICK START GUIDE

RiverRun Cabinetry

ACCESSING THE SITE

- Visit: ***orders·riverruncabinetry·com***
- First-time users must click **"Register Here"** at the bottom of the login box.
  - Fill in your name and email address.
  - Use the **Dealer Code** provided to you by RiverRun. A green bar confirms a valid code; a red bar means the code is invalid.
  - Create your own password, then confirm the password.
- If you have registered for the site previously, you can just log in.

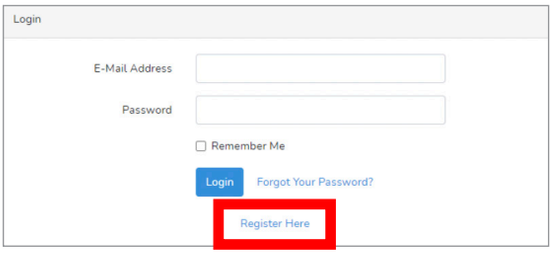

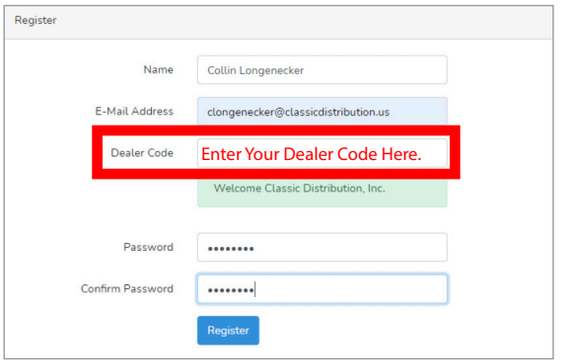

STARTING AN ORDER

Once logged in:

- Select Profile & Color Selections ("global options," located in upper right corner) for your project — these apply to all items in your quote. You must complete this step before adding products.

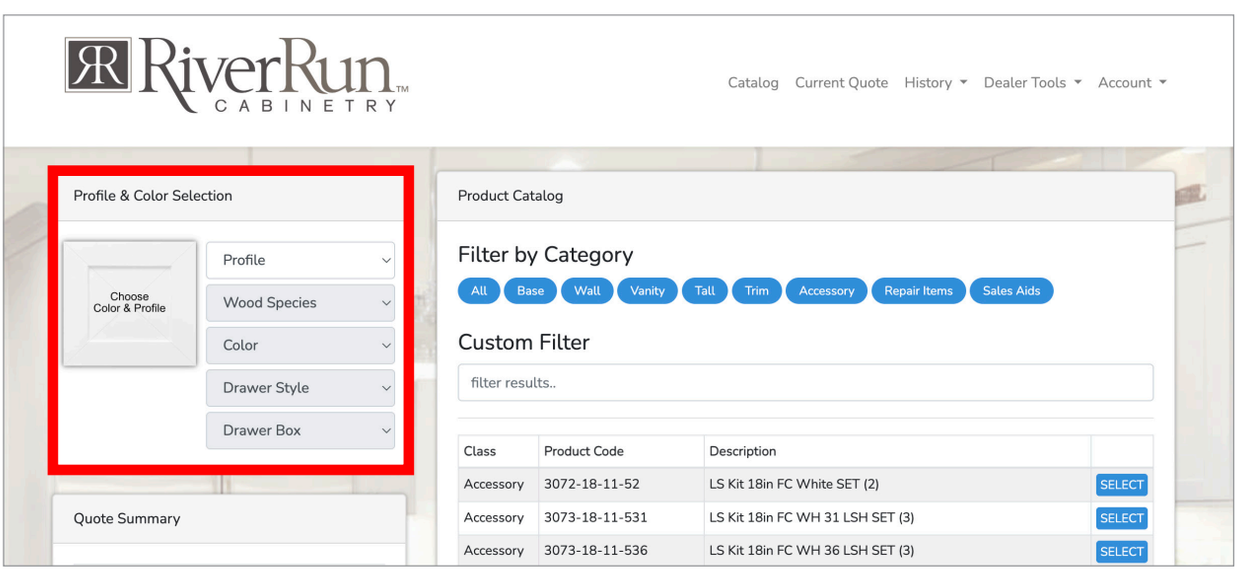

ADDING PRODUCTS

- Use **"Custom Filters"** to type keywords (e.g., "B15", "rollout") to search more quickly or **"Filter by Category."**
- Click **"Select"** next to the desired product.
- Product Pages Include:
  - Product photo (if available)
  - Description and notes
  - Required selections:
    - Finished ends
    - Hinge orientation (for single-door cabinets)
    - Optional: Click **"Custom Modifications"** for available changes.
    - Set quantity and click **"Add to Quote."**

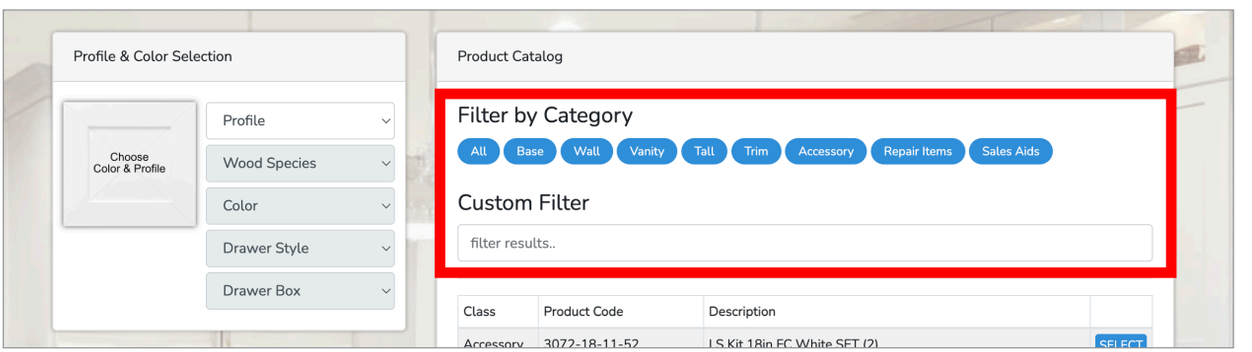

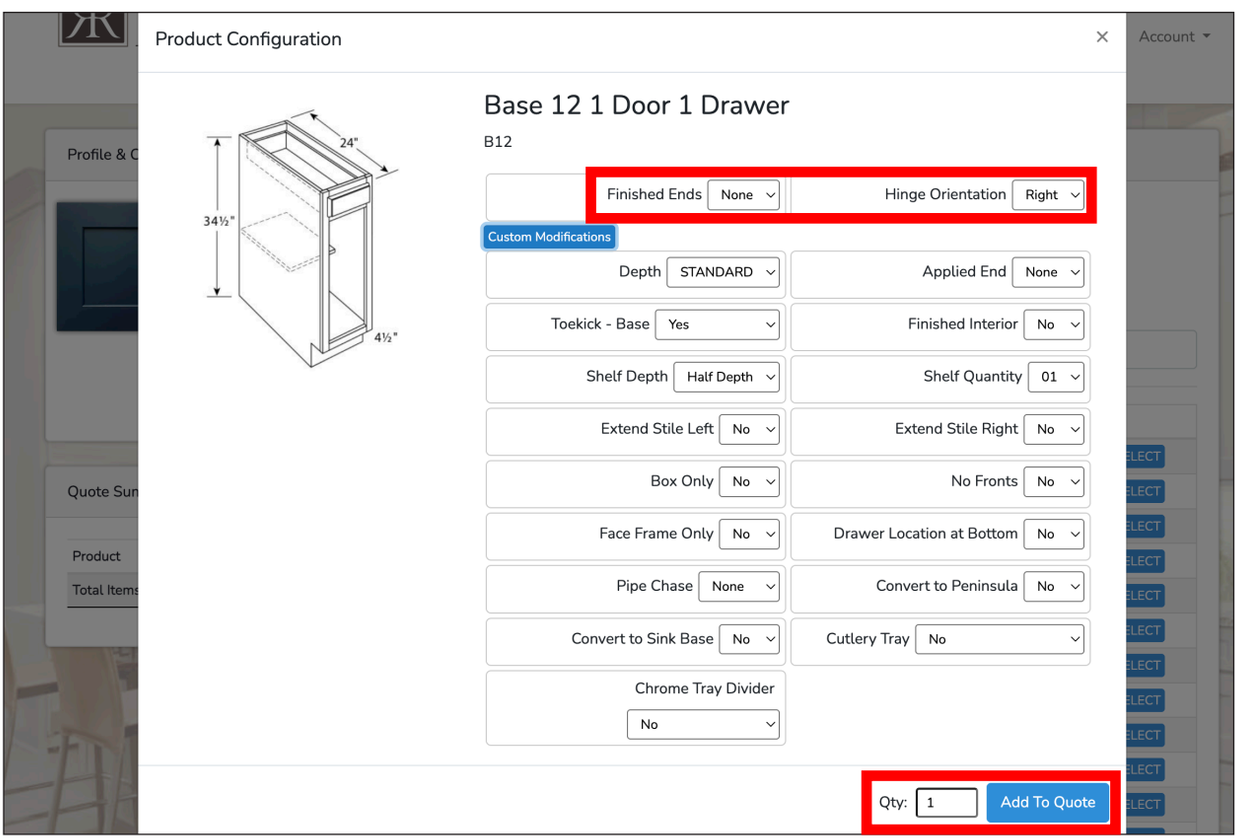

MANAGING YOUR QUOTE

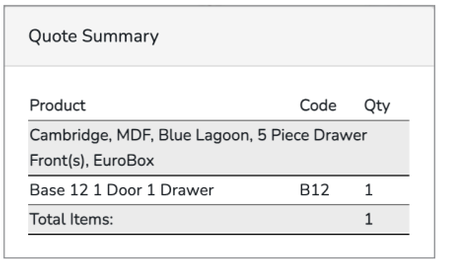

- Products appear in the **Quote Summary** (left side).
- To review your quote, click **"Current Quote"** at the top.
- Click **"Update Pricing"** to display configured options and pricing.
- A notice may appear for quotes under $1,500 (typically applies to Cycle Ship orders).
- Grand Total pricing appears in the top left corner of the **Quote Information**.
- Edit or remove items as needed.
- Styles/Global Selection may be changed by clicking the yellow **"Change Style"** button/link.
- Add more products via **"Catalog"** (link at the top)—pricing must be updated again after any change.

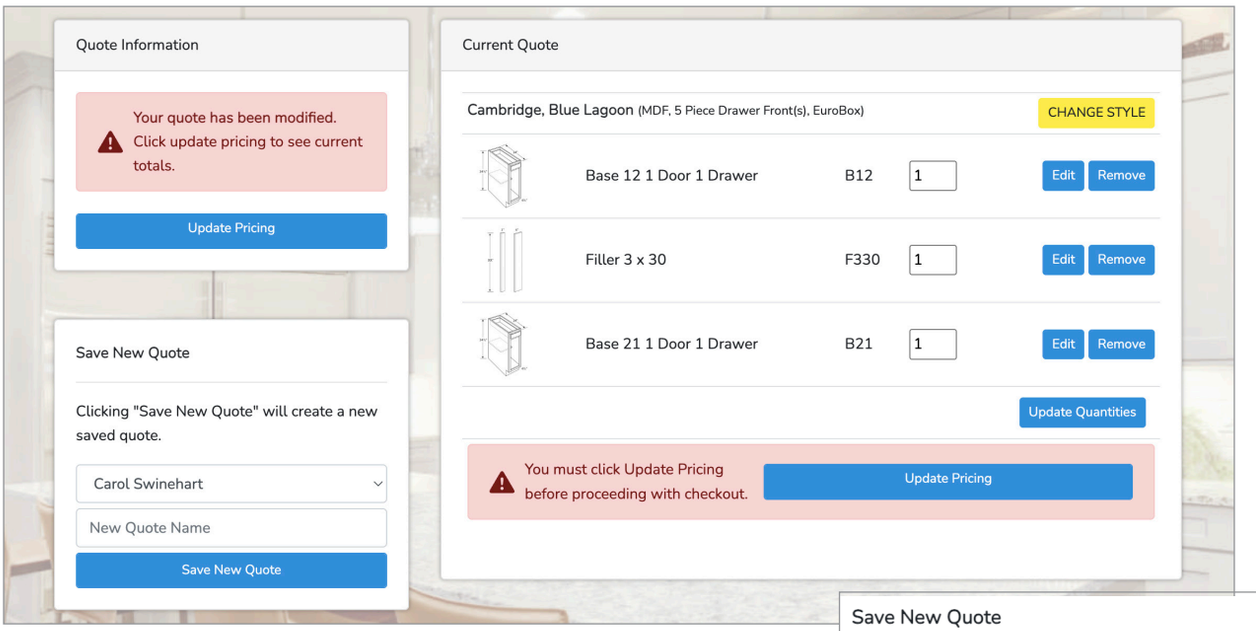

SAVING AND REUSING QUOTES

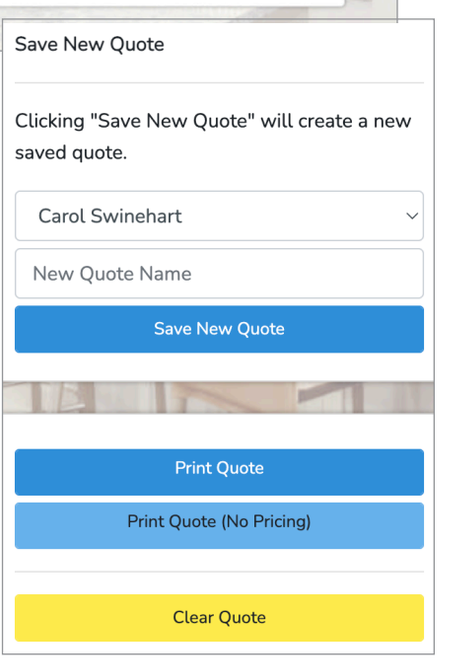

- Click **"Save New Quote",** give it a name, and add a name.
- Find saved quotes under the **"Saved Quotes"** page.
- Load a saved quote, update pricing, and proceed or edit.

QUOTE TOOLS

Options available at any time:

- Print Quote (With Pricing) — appears only after pricing is updated
- Print Quote (No Pricing)
- Clear Quote — resets the quote without deleting saved quotes
- Sending a printed quote to Customer Service, helps speed up troubleshooting if issues arise.

SUBMITTING AN ORDER

- When ready, click **"Checkout"**
- Review and confirm final details
- Click, **"Submit Order"**
- You'll receive:
  - Web Order Receipt via email, confirming the order was received
  - Sales Order Acknowledgment (with full order details) via email from RiverRun

TRACKING ORDER

- Select **"Order History"** from the menu at the top of the page
- View live status for all orders (This may take a few seconds to load)
- Search by Order Number, PO, Order Date, etc.

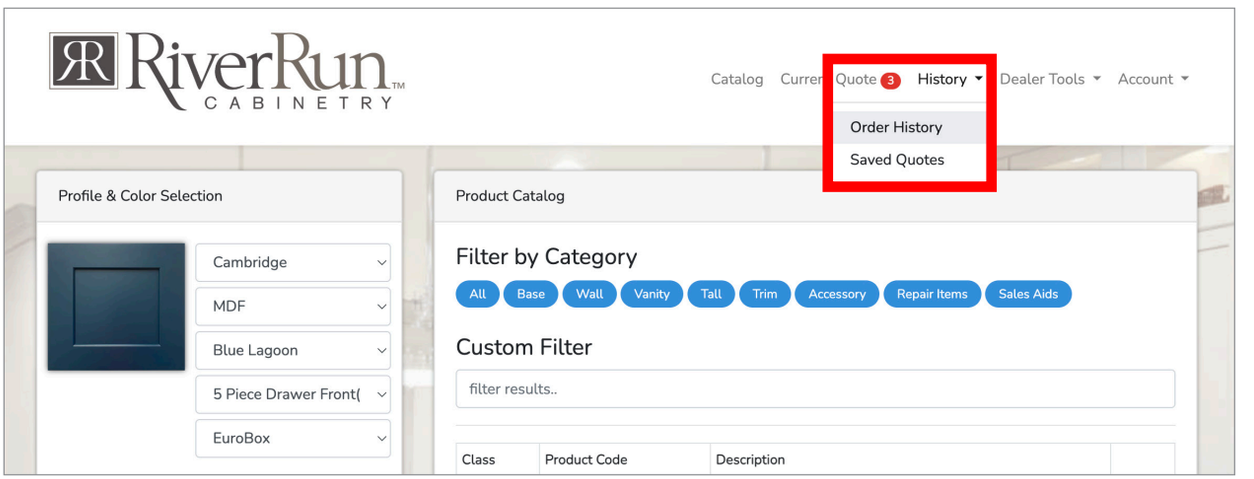

ORDER HISTORY COLUMN GUIDE

Column	Description
Order No	RiverRun order number
PO	Your PO number (if entered)
Order Date	Date submitted
Est Ship Week	Projected ship date based on lead time
Sched Ship Date	Confirmed ship date once scheduled
Amount	Total dollar amount
Type	"CUS" = standard order, "WARR" = warranty order
Ship Method	How the order will ship
Status	Refer to key above in system
Order Method	Entry method (online, 2020 file, hand key)

SHIPPING PROGRAM

River Run Cabinetry

CYCLE SHIP PROGRAM

- This program offers our dealers better service with regular scheduled deliveries on our trucks, fewer shipping damages and reduced shipping costs with a landed multiplier. Contact your Sales Rep or Customer Service to see if you qualify for this program. (Certain restrictions apply.)

- The majority of our dealers use this program as long as they meet the following delivery parameters:
  - ☐ Dealers will need to be able to receive delivery from a 70' truck (cab + trailer) If not, the order will be delivered to a nearby final-mile warehouse, and the freight company will coordinate delivery to your location. Any additional final-mile delivery charges will be invoiced after delivery.
  - ☐ Delivery address must be serviced by the customer to unload cabinets off the back of the trailer
  - ☐ Commercial Dock Required OR two people available (when truck arrives) to unload cabinets.
  - ☐ For Job site delivery needs, please consult Customer Service for available options.

- Current Cycle Ship Programs include the following areas (subject to change):
  - ☐ VMD - VA, MD, DE
  - ☐ Northeast - eastern PA, NJ, NY, CT, RI, MA, VT, NH
  - ☐ Southeast - NC, SC, GA, FL, AL
  - ☐ Prairie - southern WV, KY, TN, IL, southern WI, IA, MO, NE, KS, eastern CO
  - ☐ Midwest - MI, OH, western PA

- $250 additional charge for all deliveries to metro NYC (NY, NJ, LI)

- For orders under $1,500 an additional $150 cycle ship fee will be added to your freight costs by Customer Service after the order is placed. (This EXCLUDES items such as Sales Aids and most Trim items, that can be shipped via FedEx.) You can avoid this fee by either adding items to this order or placing another order for delivery at the same time.

- Freight Surcharges may be added to all orders (including pick-up) to cover inbound freight costs

CALCULATING FREIGHT COSTS FOR LTL SHIPMENTS (NON-CYCLE SHIP ORDERS)

- For dealers unable to use our Cycle Ship Programs, a freight grid will be created for you when your account is set up. Freight costs are based on the weight of your order and its destination.

- Customer Service will calculate orders that weigh less than 500 lbs or greater than 3000 lbs.

SHIPPING ADDRESS CHANGES

- Changes to a shipping address after order confirmation will result in possible shipping delays and administrative fees.

REGISTERING NEW SHIP TO LOCATIONS

- Contact Customer Service to set up new Ship To addresses. Please allow at least two business days for new addresses to be approved and set up in your account.

- If you are shipping to a new address that has not yet been approved, Customer Service will calculate the freight costs after you submit the order and will bill freight separately.

- Please notify Customer Service if ship to addresses require any of the following services. (LTL companies may charge higher fees on site, direct to you, if these are not noted prior to delivery.) RiverRun will invoice customers for any accessorial fees incurred at time of shipment. Unpaid fees will result in a block on the account. Customers should address disputed fees directly with LTL companies.

  - ☐ Notification of delivery beyond tracking number
  - ☐ Lift gate services (required if you do not have two people to unload cabinets off the back of the truck OR a truck height dock)
  - ☐ Residential/limited access area

CARRIERS

- Carriers are selected based on the most economical rates. If you wish to choose another carrier, please contact Customer Service.

- Orders will be shipped palletized for LTL shipments only. Be sure to have proper equipment for receiving. This option is not currently available for our Cycle Ship Programs.

- Small items may be shipped via FedEx; however, a damage disclaimer may be required. Please contact Customer Service for details. Single assembled cabinets cannot be shipped via FedEx.

PICK UPS

- Pick up orders are available and must be picked up with 24 hours of the availability date.

- Orders not picked up within the 24 hour time frame are subject to storage and handling fees of $20 per pallet per day.

SHIPPING EXCLUSIONS

- Items measuring 96" or longer must be picked up from the warehouse or shipped through the Cycle Ship Program. These items are not eligible for shipping via FedEx or LTL.

MISSED DELIVERIES

- Refused orders or missed deliveries will be charged a minimum of $500 re-delivery fee.

MISSING ITEM(S) FROM DELIVERY/SHIPMENT

- In the event that you have a missing item(s) from a delivery, please notify Customer Service of the missing item(s) using the Warranty & Replacement Form found on the Online Order site, listed in the top menu bar, under "Warranty."

- Missing item(s) <u>must</u> be reported within 15 days of delivery.

DAMAGES & WARRANTIES

River Run Cabinetry

DAMAGE & WARRANTY REPLACEMENT PROGRAM

- In the event that you have a damaged or warranty item, we will take the most expeditious measures to replace the damaged parts.
- Your prompt response to the damage order confirmation request will keep the order moving as quickly as possible. All damages/warranties require approval of order acknowledgement. Orders will not be processed without written approval confirmation.
- Shipping damage must be reported within 15 days.
- Please check the cabinet/parts before installation as we will not replace the case after it has been installed.
- Please review our warranty before submitting a claim.

Process to replace a damaged or warranty cabinet/part:

1) Go to the Online Order site.
2) Complete the Warranty Form. (The link is located in the top right corner of the menu bar under "Warranty.")
3) Include photos of the damage. This information is critical for reimbursement, processing, and development of future preventative measures. Replacement forms must include a photo in order for a replacement to be sent at no charge.
4) Do not use, destroy or discard the damaged item. It is required that the item be available for the shipping company to retrieve. We will contact you to arrange for pickup. If the carrier is unable to reclaim the part, you will be charged for the replacement.
5) Customer Service will send you an Order Acknowledgment if your warranty claim is approved
6) Please respond to that Order Acknowledgment email with an approval or any necessary changes. Orders will not be processed without written approval confirmation.

Five Year Limited Warranty

All our cabinets come with a five-year warranty for the original purchaser starting from the purchase date. We assure the original purchaser that all parts and components are free from defects in material and workmanship under normal use. Defects, in this context, refer to any imperfection that might hinder the proper use of the cabinets. This warranty is exclusive to the original cabinet purchaser and is not transferable.

Wood, like other natural materials, is influenced by environmental factors such as natural and artificial lighting. The darkening or mellowing of wood is a natural aging process. Each wood species has its unique patterns and characteristics that contribute to its natural beauty. These color and characteristic variations are not considered defects. This warranty does not cover the natural aging and darkening of wood color, nor does it apply to the inherent growth characteristics of wood. Color variations and softening due to species, age, cabinet character, and exposure to UV light and sunlight are natural occurrences and not valid reasons for warranty replacements.

Natural variations in wood grain or color may cause your cabinet to not exactly match the original sample or be exactly the same as one another; this is due to the natural characteristics of wood grain and color. Additionally, the characteristic of wood is to expand and contract over time. As such, hairline cracks and/or finish stress lines may become visible on painted or stained mitered doors or wooden joints, and are not considered defects.

Extreme temperatures and humidity levels in homes may cause materials to shrink, swell, or warp (usually more in width than height), and this is beyond the control of RiverRun Cabinetry and is not covered under warranty. Cabinets should not be installed in new constructions until humidity and temperatures are controlled. Warped cabinet doors must be allowed to hang through one seasonal heating cycle before considering replacement under this limited warranty.

- A twist or warp up to ¼" is not considered a defect for warranty replacement. Door sizes have a tolerance of (+ or -) 1/32".

Products used for commercial purposes are excluded from this warranty. Not covered are cabinets showing normal wear and tear, cabinets improperly stored or installed, improperly assembled or disassembled, intentionally damaged, misused, or exposed to the elements, cabinets with defects due to excessive moisture, accidents, or negligence, and cabinets changed or modified in any way.

RiverRun Cabinetry does not warrant the installation of "stand-alone" or independent cabinets in widths greater than thirty-six inches and depths greater than twelve inches. All cabinets, regardless of design dimension or shape, must be affixed to "studs," permanently fastened to the interior wall, floor, or ceiling joists attached to permanent structures (i.e., interior partition wall or floor). It is important to note that structural modification of a wall cabinet can significantly weaken it, and modifications are not recommended. If a modification is required, the warranty of the cabinet is void, and it is the installer's responsibility to compensate for any loss of strength or support due to the modification.

This warranty is expressly limited to the replacement of defective component parts at our discretion. Our liability is expressly limited to the cost of the material for the replacement of defective goods. We may choose to replace the product with a product of equal value and complementary style if the original style is no longer available. Due to the aging process of natural wood, an exact match between the finish of the existing product and its replacement cannot be guaranteed.

In no event are we liable for incidental, indirect, or consequential damages resulting from the use of our cabinets. This warranty does not cover the cost of installation, removal, subsequent damage, or transportation of the defective product, regardless of whether the work was performed by a contractor, service company, or consumer.

Some states do not allow limitations on how long an implied warranty may last or the exclusion and/or limitations of incidental and/or consequential damages. Therefore, the above limitations may not apply. This warranty provides specific rights that may vary from state to state. Any claims made under this warranty must be presented in writing with a Replacement Form and accompanied by photographs of the defective material.

DEALER AGREEMENT - RESPONSIBILITIES

RiverRun Cabinetry

This document outlines the expectations and responsibilities regarding product care, warranty conditions, and RiverRun Cabinetry policies. By signing below, the dealer agrees to the terms described in the following sections.

1. Delivery Inspection:

- Upon delivery, the dealer must thoroughly inspect all cabinets and products and ensure that qualified personnel are available to unload the truck. Any damages or shortages must be documented on the signed delivery receipt; items not noted on the receipt may not be eligible for replacement. For replacements, the dealer is required to submit the warranty form along with photos of the damage.

2. Minor Repairs and Adjustments:

- The dealer is responsible for addressing any minor damages incurred during shipping. This includes performing necessary touch-ups and final adjustments on doors and drawers. All labor costs associated with warranty services are the responsibility of the dealer.

3. Jobsite Support and Resolution:

- If an issue arises after delivery at a jobsite, the dealer (or a dealer representative) will visit the site to determine an appropriate solution. When on-site service is required, the dealer or their representative must be present at the start of the work to ensure a clear and shared understanding of the required tasks. Once the work is completed, a dealer representative must be present to verify that the work meets the customer's satisfaction.

4. Warranty Claims:

- All damage and warranty claims must be submitted through the **Online Order System Warranty Form** and include photos of the issue. Shipping damage must be reported within **15 days of delivery**. Dealers must inspect cabinets prior to installation and retain any damaged items for carrier inspection if requested. Dealers agree to follow the **Damage & Warranty Replacement Program (GI-13)** and all evaluation procedures outlined in this SpecBook, including the **Door Movement & Warped Door Evaluation procedure (GI-16)**, prior to submitting a claim.

RiverRun Responsibilities Agreement and Acknowledgment

By signing below, the dealer acknowledges they have read, understood, and agree to abide by all policies and responsibilities outlined above. ***This agreement is required for activation as an authorized RiverRun Cabinetry dealer.***

COMPANY/DEALER NAME: _____

DEALER REPRESENTATIVE (PRINT NAME, PLEASE): _____

SIGNATURE: _____ DATE: _____

DEALER AGREEMENT - PRODUCT EXPECTATIONS

RiverRun Cabinetry

Warped Doors

- If cabinet doors appear warped after installation due to environmental factors such as high or low humidity, the doors should be left open for 24 hours to acclimate. In cases where the warping is ¼" or less, the doors should cycle through all four seasons before a no-charge replacement is considered.
- In some instances, cabinets may be improperly "force-flexed" (instead of correctly shimmed) to conform to uneven walls or floors. This may cause cabinet boxes to become out of square, making the doors appear warped.
- If a door appears warped, the following evaluation must be performed:
    1. Remove the door from the cabinet and detach all hardware.
    2. Place the door on a completely flat surface (granite or quartz countertop preferred). Alternately press on opposite corners to check if the door rocks or lifts.
    3. If a gap between the door and the surface measures ¼" or greater, a replacement will be considered.

Product Samples

- The dealer is responsible for maintaining current color chips, sample doors, and display materials. Warranty claims will not be honored if selections were made using outdated samples.
- RiverRun Cabinetry will notify all dealers of any color-altering changes. If the dealer has current samples of the product being changed, a no-charge replacement will be provided upon receipt of a written order request from the dealer.

Additional Conditions

RiverRun Cabinetry will not be held responsible for any loss, damage, detention, or delays caused by events beyond reasonable control. This includes, but is not limited to, fire, flood, strikes, embargoes, vehicle accidents, transportation delays, or natural disasters.

RiverRun Cabinetry is not liable for labor costs incurred during the installation of damaged or defective products.

RiverRun Product Expectations Agreement and Acknowledgment

By signing below, the dealer acknowledges they have read, understood, and agree to abide by all policies and responsibilities outlined above. ***This agreement is required for activation as an authorized RiverRun Cabinetry dealer.***

COMPANY/DEALER NAME: _____

DEALER REPRESENTATIVE (PRINT NAME, PLEASE): _____

SIGNATURE: _____

DATE: _____

CABINET SPECS & FINISHES

RiverRun Cabinetry

GENERAL PRODUCT NOTES

DOOR STYLES, COLORS AND PRICE GROUPS:

PRICE GROUP 1	PRICE GROUP 2	PRICE GROUP 3	PRICE GROUP 4	PRICE GROUP 5
Parkview (Maple)	Parkview (MDF)	Cambridge (MDF)	Jefferson (Oak)	Dalton (Birch)
		Jefferson (MDF)	StoneRidge (MDF)	Hampton (MDF)
				StoneRidge (Maple)

Please Note *(as of 6/30/25)*: Price Groups include Slab Drawer Fronts. If you choose 5-piece Drawer Fronts, an additional flat charge of $47 per Drawer Front will be applied to your order.

PRICE GROUPS FOR ACCESSORIES:

PRICE GROUP 1	PRICE GROUP 2
Stains	Paints

PRODUCT SPECIFICATIONS / NOTES

- RiverRun Cabinetry provides a broad selection of cabinet sizes and accessories.

DOOR CLEARANCE

- As with all full overlay door styles, clearance of doors and drawers must be taken into consideration during the design process to assure proper operation of all doors, drawers and roll out trays.

SINGLE DOOR CABINET HINGING

- Using the Online Order System, please select hinge left or hinge right on single door cabinets.

CABINET SIZES

- Standard wall cabinets are 12″ deep unless otherwise specified.
- Standard base cabinets are 34½″ tall and 24″ deep.
- Standard vanity cabinets are 34½″ tall and 21″ deep.

TOE KICK MATERIAL

- All cabinets with a toe notch require ¼″ x 4½″ high, toe kick material. This needs to be ordered in addition to the cabinetry.

In keeping with a policy of continuous refinement, RiverRun Cabinetry reserves the right to alter specifications without general notice or obligation to make similar changes in previously produced product.

STANDARD PRODUCT MATERIALS

CASE

- Standard face frames are traditional construction and are ¾" thick with 1½" stiles and rails made of solid wood.
- End panels are ½" thick plywood. Interiors include a clear coat finish and exteriors have a natural finish, both with option to add a finished skin.
- Shelves are ¾" thick balanced veneer core plywood, sealed with a clear-coat and are adjustable and front edge banded.
- Backs are ½" thick plywood to allow multiple locations for installation. Base cabinet backs extend to the floor providing optimal structural stability.
- Toe kick is recessed 4" and is 4½" high.

DRAWERS, GLIDES & HINGES

- EuroBoxes come standard with ⅝" thick hardwood plywood with drill and dowel construction. Optional upgraded dovetail drawer boxes are also available. *(Current dovetail drawer box pricing is located in the Modification section.)* Both drawer box options are UV clear-coated on all sides.
- Bottoms are fully captured plywood on the EuroBox and the upgraded dovetail box.
- Glides are under mounted full-extension and soft close on both drawer options.
- Integrated soft-close hinges are standard for all door styles.

SLAB/5 PIECE COMBINATION DRAWER OPTIONS

- The combination drawer front selection (COMBO) will be a 5% upgrade on any applicable cabinet, the list is below are all cabinets that will be impacted by this upgrade. Any drawer front that is below the level of the drawer front of a standard base will be upgraded to the five piece. For example, on the 4 drawer base the top drawer will be slab and then every drawer below that will be five piece and on the 2 drawer base both drawer fronts will be five piece.

Product	Example	Description of Combo
Base Microwave	BM30	Only drawer front (bottom of cab) five piece
2 Drawer Base	DBXX-2	Both drawer fronts five piece
3 Drawer Base	DBXX-3	Top drawer front slab, bottom two drawer fronts five piece
4 Drawer Base	DBXX-4	Top drawer front slab, bottom three drawer fronts five piece
Oven Cabinet	OC33XXD	Only drawer front (bottom of cab) five piece
Vanity 3 Drawer Base	VDBXX	Top drawer front slab, bottom two drawer fronts five piece
Vanity 4 Drawer Base	VDB60 (only)	Top drawer front slab, bottom three drawer fronts five piece
Vanity Sink Drawer	VSDLXX/VSDRXX	Top drawer front slab, bottom two drawer fronts five piece

REVEALS

- Wall cabinet doors have a ¼" reveal on bottom and sides. The top reveal is 1" for moulding installation.
- Base cabinet doors have a ¼" reveal on bottom and sides. The top drawer head has a ¼" reveal on the sides and a ½" reveal on the bottom (between the drawer and door).
- All base cabinets have a 1" reveal on top.

FINISH

- Catalyzed conversion varnish top coat with UV protection is applied to doors, drawers and face frames.

SPECIES/MATERIAL

- Natural Hardwood
- MDF for painted doors, except where noted

WALL CONSTRUCTION

River Run Cabinetry

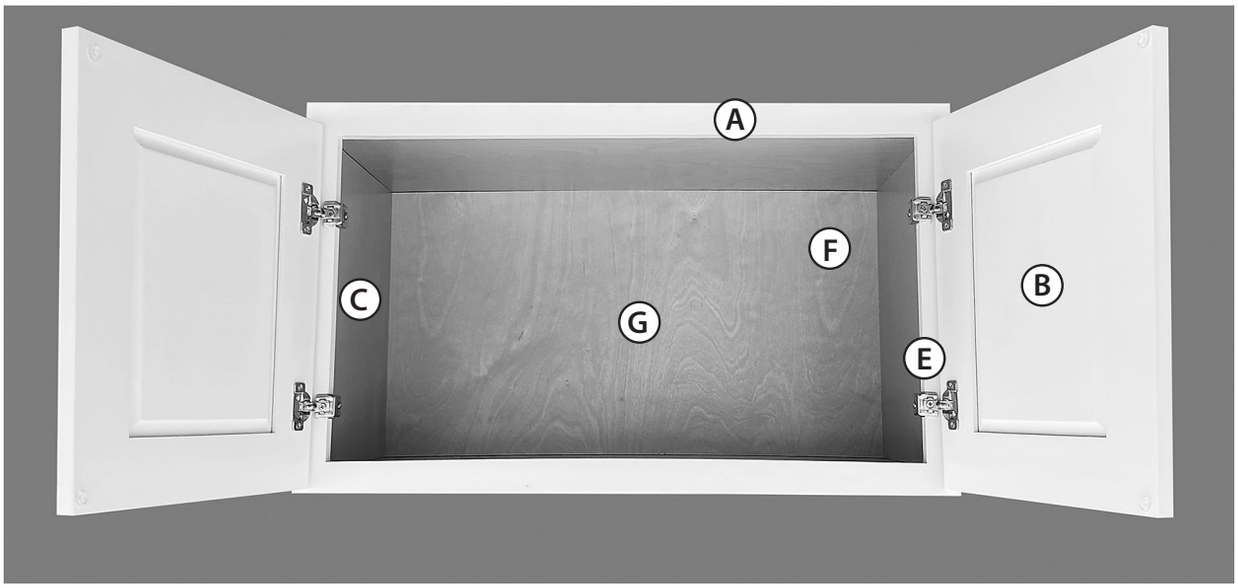

(A) FACE FRAMES
Constructed from ¾" hardwood. Base and wall frames have 1½" stiles and rails.

Wall cabinets have a 1" reveal at the top for moulding installation. Bottom and sides have ¼" reveal.

(B) DOORS
Premium full overlay door styles with soft-close door hinges. Stained doors are solid hardwood and painted doors are MDF. (See door specification pages: SF6-8 for details.)

(C) PANELS
Constructed from ½" plywood with option for finished skins. Ends, tops and bottoms are captured in frame grooves. Backs are captured in end panel grooves.

(D) SHELVES *(not shown)*
Constructed from ¾" plywood and finished on both sides. Wall shelves are adjustable at 2½" increments. All secured for shipment with locking shelf clips utilizing ¼" diameter dowel.

(E) HINGES
6-way fully concealed 108° self-closing cup hinges that allow easy height, width, and depth adjustment. Soft-close hinges are standard.

(F) CABINET INTERIOR
Sealed with clear-coat finish. Finished Interior* option may be selected on wall, base and tall cabinets up to 24" deep.

(G) BACKS
For ease of installation, backs are solid ½" plywood.

(H*) FINISHED INTERIORS (FI) - optional *(not shown)*
Cabinet interiors will be finished to match exterior. Shelves in cabinets with Finished Interior option will also be finished to match exterior.

BASE CONSTRUCTION

RiverRun Cabinetry

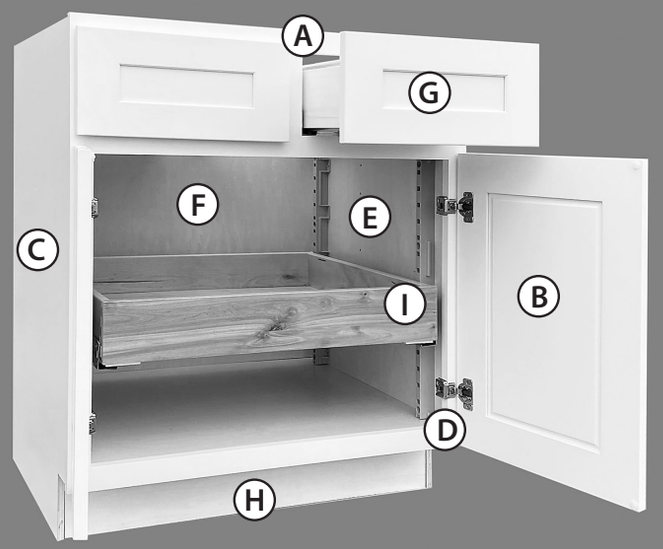

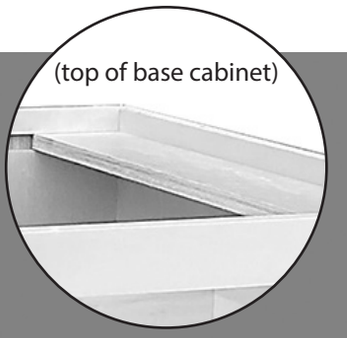

I-BEAM STRETCHERS

All base cabinets have a ⅜" x 3" I-beam stretcher on the top left and right sides. The stretchers are captured by grooves in the frame, end panels and back panel to provide reinforcement to the base cabinet construction.

(A) FACE FRAMES

Constructed from ¾" hardwoods. Base and wall frames have 1½" stiles and rails. Base cabinets have a 1" reveal at the top. Bottom and sides have ¼" reveal.

(B) DOORS

Premium full overlay door styles with soft-close door hinges. Stained doors are solid hardwood and painted doors are MDF. (See door specification pages: SF6-8 for details.)

(C) PANELS

Constructed from ½" plywood with option for finished ends. All finished ends are applied ¼" skin. Ends, tops and bottoms are captured in frame grooves. Backs are captured in end panel grooves.

(D) HINGES

6-way fully concealed 108° self-closing cup hinges that allow easy height, width, and depth adjustment are standard.

(E) CABINET INTERIOR

Sealed with clear-coat finish. Finished Interior* option may be selected on wall, base and tall cabinets up to 24" deep.

(F) BACKS

Backs are solid ½" plywood. Base cabinet backs extend to the floor providing optional structural stability.

(G) DRAWERS

EuroBoxes are ⅝" thick hardwood plywood with dowel construction. Option to upgrade to dovetail construction. Both options are clear coated and bottoms are fully captured plywood. Glides are under mount, full extension soft-close.

(H) TOE KICKS

Constructed from ½" unfinished plywood. They are inset into the cabinet box 3½" and are 4½" high. Toe Kick Material (TKS) required to finish the toe kick space.

(I) ROLL OUT TRAY & PILASTER KIT (optional)

EuroBox (standard) or dovetail upgrade option for roll out tray box with undermount glides. Pilasters are installed at each corner of base cabinet (pantries get 2 sets of pilaster kits) with slots for approximate 1" height adjustments.

DOOR STYLES & FINISHES

River Run Cabinetry

FINISH AVAILABILITY MATRIX

		PARKVIEW (Maple - stains) (MDF - paints)	STONERIDGE (Maple - stains) (MDF - paints)	JEFFERSON (Red Oak - stains & paints) (MDF - paints)	CAMBRIDGE (MDF)	DALTON (Birch)	HAMPTON (without glaze) (MDF)
STAINS	Smoke	X	X	X		X	
	RiverRock	X	X	X		X	
	Pecan	X	X	X		X	
	Sahara	X	X	X		X	
	Dune	X	X	X		X	
	Natural	X	X	X		X	
PAINTS	White	X	X	X	X		X
	Linen	X	X	X	X		X
	Oyster	X	X	X	X		X
	Mint	X *(retiring 2026)*	X *(retiring 2026)*	X *(retiring 2026)*	X *(retiring 2026)*		X *(retiring 2026)*
	Pewter	X	X	X	X		X
	Sage	X	X	X	X		X
	Rosemary	X	X	X	X		X
	Peppercorn	X	X	X	X		X
	Blue Lagoon	X	X	X	X		X
	Onyx	X	X	X	X		X

CAMBRIDGE (SLAB)

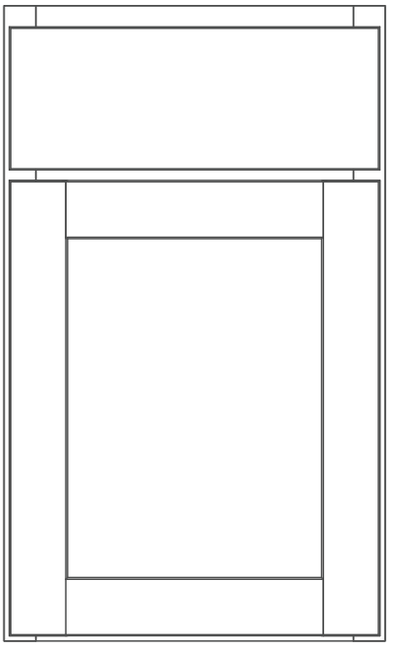

Species: Premium MDF

Construction & Specifications:

- drawer fronts are slab
- available in all paint colors
- full overlay door
- 2¾" stiles and rails
- center panel is a solid reversed raised panel

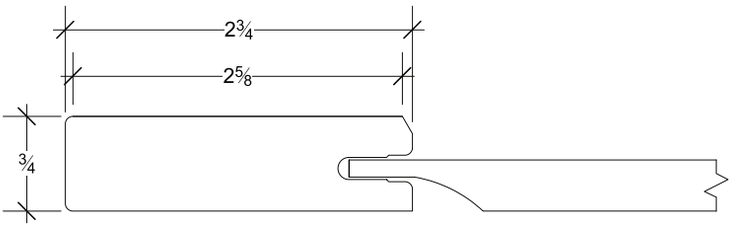

CAMBRIDGE (5-PIECE)

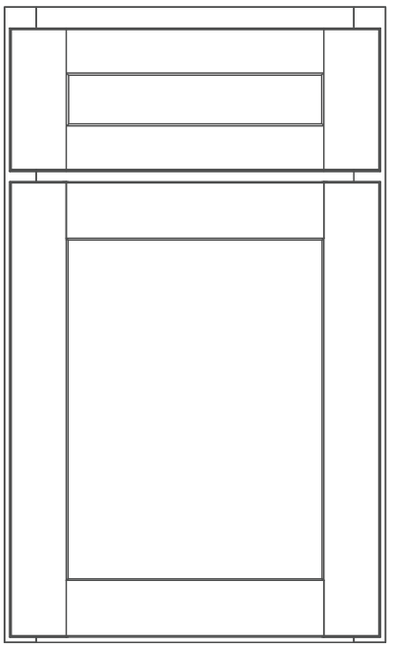

Species: Premium MDF

Construction & Specifications:

- drawer fronts are 5-piece
- available in all paint colors
- full overlay door
- 2¾" stiles and rails
- center panel is a solid reversed raised panel

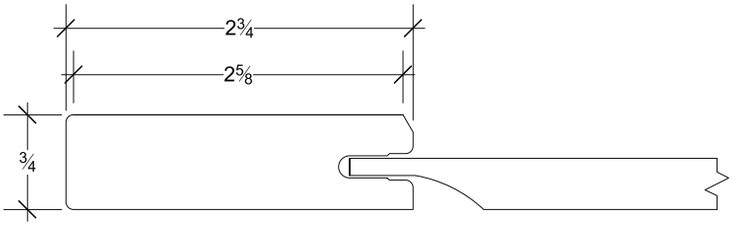

JEFFERSON (SLAB)

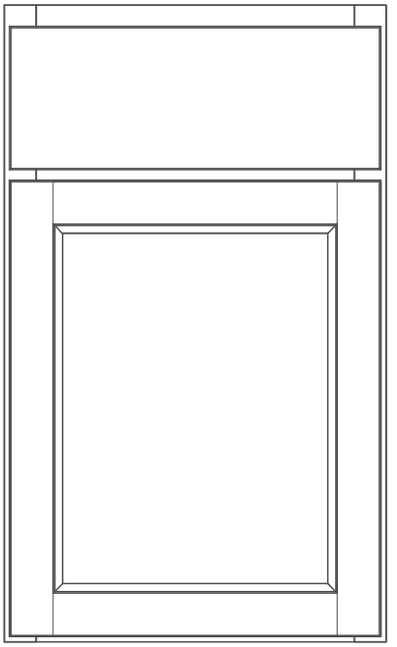

Species: Red Oak & MDF

Construction & Specifications:

- drawer fronts are slab
- available in all paint colors
- available stains: Cocoa, RiverRock, Smoke, Pecan & Sahara
- full overlay door
- 2½" stiles and rails
- center panel is ¼" flat panel veneer

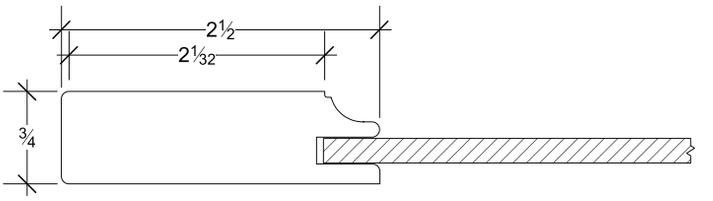

JEFFERSON (5-PIECE)

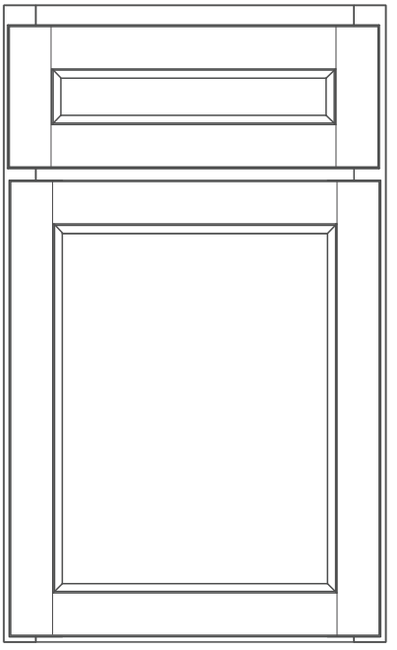

Species: Red Oak & MDF

Construction & Specifications:

- drawer fronts are 5-piece
- available in all paint colors
- available stains: Cocoa, RiverRock, Smoke, Pecan & Sahara
- full overlay door
- 2½" stiles and rails
- center panel is ¼" flat panel veneer

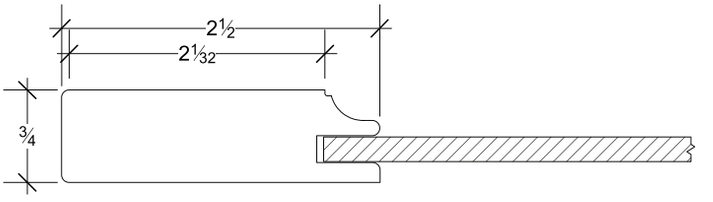

DALTON (SLAB)

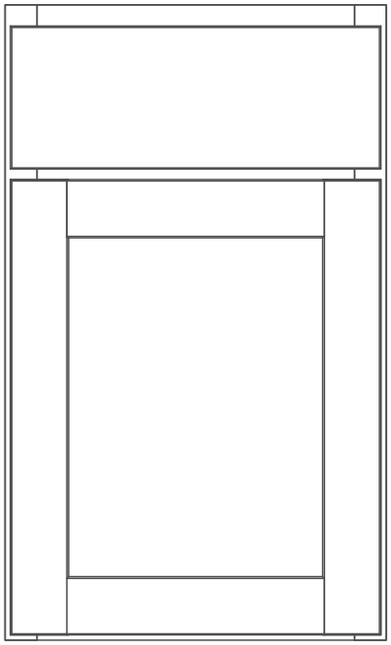

Species: Birch

Construction & Specifications:

- drawer fronts are slab
- available in all stains
- full overlay door
- 2¾" stiles and rails
- center panel is a solid reversed raised panel

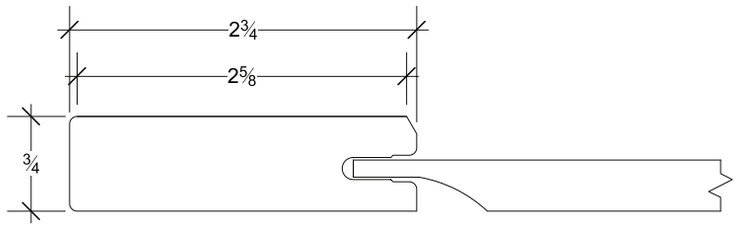

DALTON (5-PIECE)

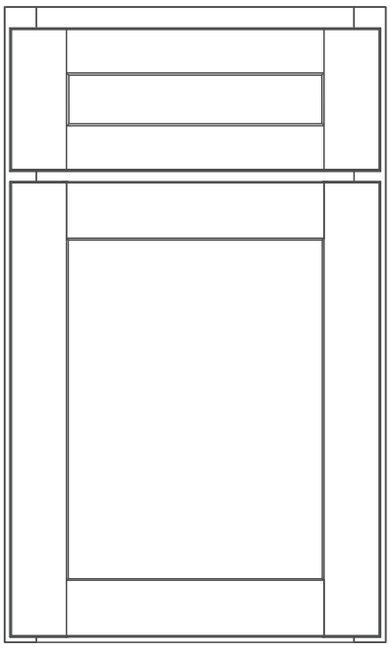

Species: Birch

Construction & Specifications:

- drawer fronts are 5-piece
- available in all stains
- full overlay door
- 2¾" stiles and rails
- center panel is a solid reversed raised panel

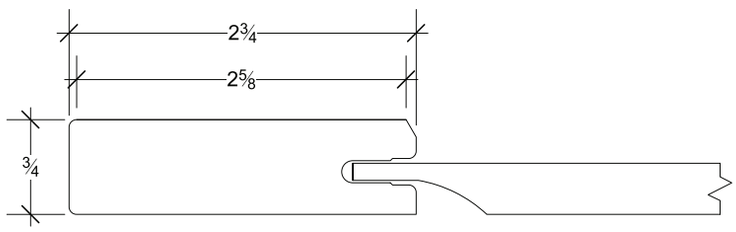

PARKVIEW (SLAB)

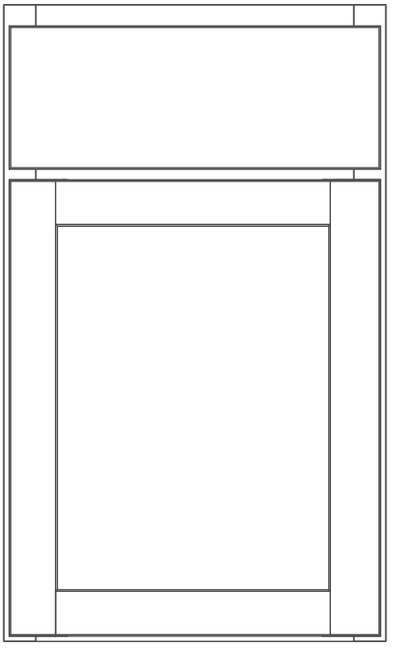

Species: Maple & Premium MDF
Construction & Specifications:

- drawer fronts are slab
- available in all paint colors
- available in Cocoa, RiverRock, Smoke, Pecan & Sahara
- full overlay door
- 2 3⁄16″ stiles and rails

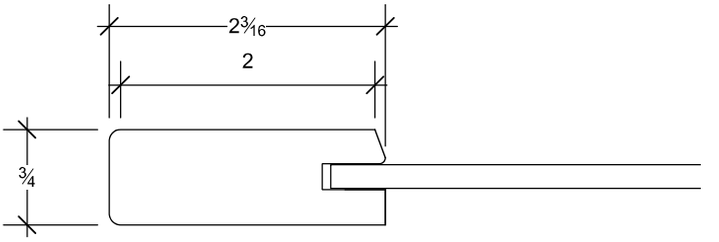

PARKVIEW (5-PIECE)

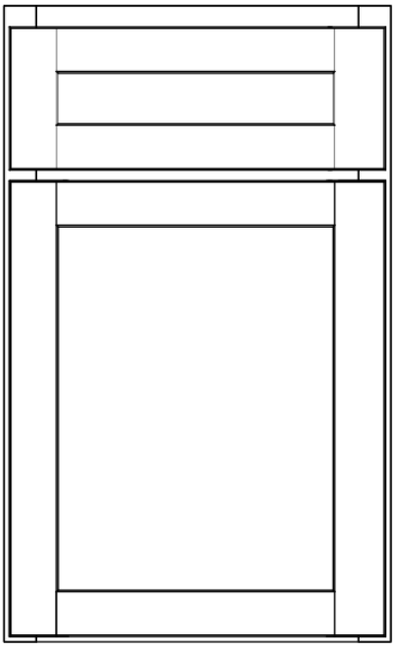

Species: Maple & Premium MDF

Construction & Specifications:

- drawer fronts are 5-piece
- available in all paint colors
- available in Cocoa, RiverRock, Smoke, Pecan & Sahara
- full overlay door
- 2 3⁄16″ stiles and rails

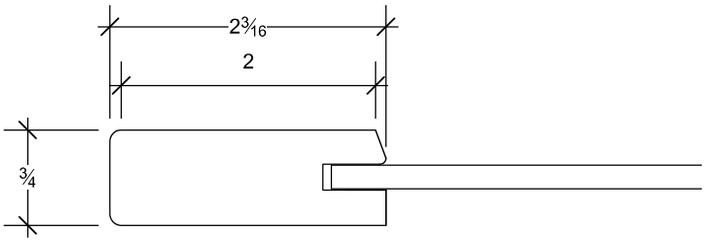

STONERIDGE (SLAB)

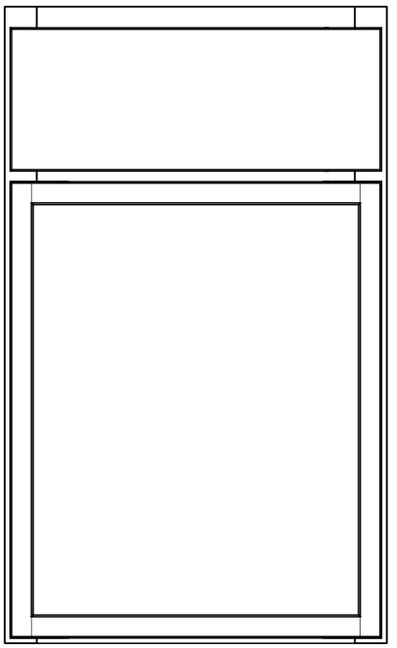

Species: Maple & Premium MDF

Construction & Specifications:

- drawer fronts are slab
- available in all paint colors
- available in Cocoa, RiverRock, Smoke, Pecan & Sahara
- full overlay door
- 1″ stiles and rails

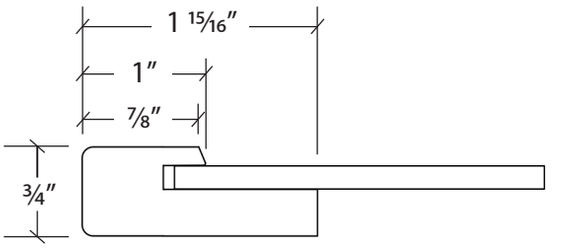

STONERIDGE (5-PIECE)

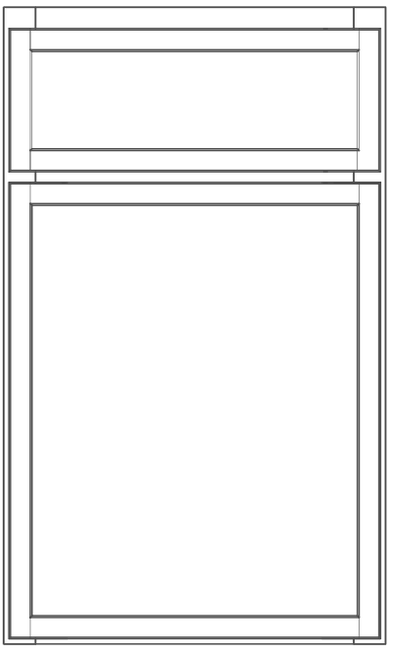

Species: Maple & Premium MDF

Construction & Specifications:

- drawer fronts are 5-piece
- available in all paint colors
- available in Cocoa, RiverRock, Smoke, Pecan & Sahara
- full overlay door
- 1″ stiles and rails

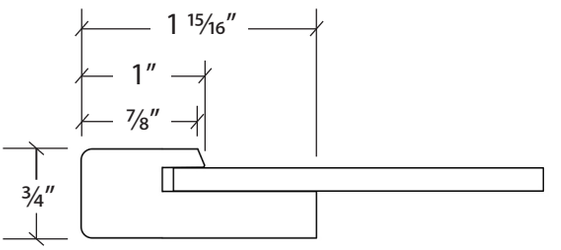

HAMPTON

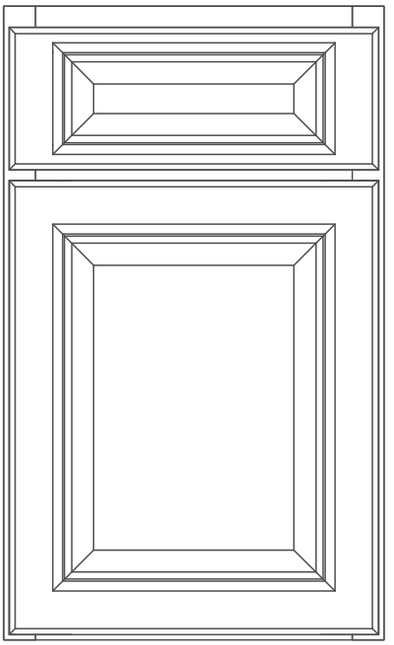

Species: Premium MDF

Construction & Specifications:

- drawer fronts are 5-piece
- available in all paint colors
- full overlay door
- 2 15/16" stiles and rails
- raised center panel

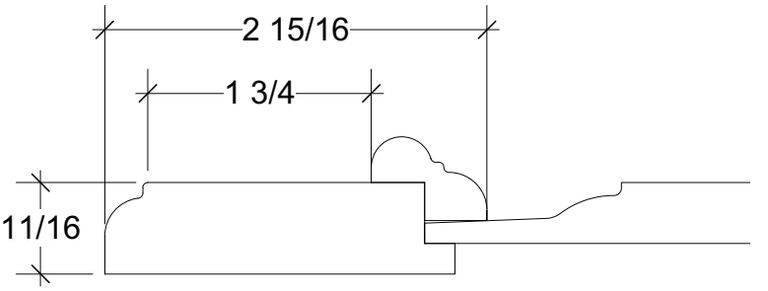

DOOR SIZE CHART			
ITEM NO.	CABINET	DOOR WIDTH	DOOR HEIGHT
DR-ER33	ER33	7.805	28.75
DR-W0930	W0930, B09	8.5	28.75
DR-W0936	W0936	8.5	34.75
DR-W0939	W0939	8.5	37.75
DR-W0942	W0942	8.5	40.75
DR-ERCW2412	ERCW2412	10.805	10.75
DR-ERCW2415	ERCW2415	10.805	13.75
DR-ERCW2418	ERCW2418	10.805	16.75
DR-ER36	ER36	10.805	28.75
DR-ERCW2436	ERCW2436	10.805	34.75
DR-ERCW2439	ERCW2439	10.805	37.75
DR-ERCW2442	ERCW2442	10.805	40.75
DR-W1212	W1212, WEP1212	11.5	10.75
DR-MB12	MB12	11.5	12.5
DR-W1215	W1215, WEP1215	11.5	13.75
DR-W1218	W1218, WEP1218	11.5	16.75
DR-B12	B12, VB12	11.5	21.5
DR-W1230	W1230, BB36, BW2430, WEP1230	11.5	28.75
DR-W1236	W1236, BW2436, WEP1236	11.5	34.75
DR-W1239	W1239, BW2439, WEP1239	11.5	37.75
DR-W1242	W1242, BW2442, WEP1242	11.5	40.75
DR-W2412	W2412	11.6875	10.75
DR-W2415	W2415	11.6875	13.75
DR-W2418	W2418, AG2418BD(retired)	11.6875	16.75
DR-B24-2	B24-2, V24-2	11.6875	21.5
DR-W2430-2	W2430-2, P2484	11.6875	28.75
DR-W2436-2	W2436-2, P2490	11.6875	34.75
DR-W2439-2	W2439-2, P2493	11.6875	37.75
DR-W2442-2	W2442-2, P2496	11.6875	40.75
DR-P2484	P2484, P2490, P2493, P2496	11.6875	49
DR-W2712	W2712	13.1875	10.75
DR-W2715	W2715	13.1875	13.75
DR-W2718	W2718	13.1875	16.75
DR-B27	B27, V27	13.1875	21.5
DR-W2730	W2730	13.1875	28.75
DR-W2736	W2736	13.1875	34.75
DR-W2739	W2739	13.1875	37.75
DR-W2742	W2742	13.1875	40.75

(continued on next page)

(continued from previous page)

DOOR SIZE CHART			
ITEM NO.	**CABINET**	**WIDTH**	**HEIGHT**
DR-TAB12FHDL	TAB12FHDL, TAB12FHDR	14	28.75
DR-W1512	W1512	14.5	10.75
DR-W1515	W1515, CW2415	14.5	13.75
DR-W1518	W1518	14.5	16.75
DR-ADAG2418	ADAG2418	14.5	17.5
DR-B15	B15, BB42, DSB36, VB15, VSB60, VSDL30, VSDR30	14.5	21.5
DR-W1530	W1530, CW2430, P1584	14.5	28.75
DR-W1536	W1536, CW2436, CW2736, P1590	14.5	34.75
DR-W1539	W1539, CW2439, CW2739, P1593	14.5	37.75
DR-W1542	W1542, CW2442, CW2742, P1596	14.5	40.75
DR-P1584	P1584, P1590, P1593, P1596	14.5	49
DR-W3012	W3012	14.6875	10.75
DR-WMW303318	WMW303318	14.6875	12.25
DR-W3015	W3015, SAMPLEDOOR	14.6875	13.75
DR-W3018	W3018, SBFH30	14.6875	16.75
DR-W3021	W3021	14.6875	19.75
DR-B30	B30, SB30, V30, VSB60	14.6875	21.5
DR-W3024	W3024	14.6875	22.75
DR-WMW304518	WMW304518	14.6875	24.25
DR-W3027	W3027	14.6875	25.75
DR-W3030	W3030, BW4230, P3084	14.6875	28.75
DR-W3036	W3036, P3090	14.6875	34.75
DR-W3039	W3039, P3093	14.6875	37.75
DR-W3042	W3042, P3096	14.6875	40.75
DR-P3084	P3084, P3090, P3093, P3096	14.6875	49
DR-W3312	W3312	16.1875	10.75
DR-W3315	W3315	16.1875	13.75
DR-OC3384D	OC3384D, W3318, SBFH33	16.1875	16.75
DR-B33	B33, SB33, V33	16.1875	21.5
DR-OC3390D	OC3390D, W3324	16.1875	22.75
DR-OC3393D	OC3393D	16.1875	25.75
DR-W3330	W3330, OC3396	16.1875	28.75
DR-W3336	W3336	16.1875	34.75
DR-W3339	W3339	16.1875	37.75
DR-W3342	W3342	16.1875	40.75
DR-W1812	W1812	17.5	10.75
DR-W1815	W1815	17.5	13.75
DR-W1818	W1818	17.5	16.75
DR-AG1818	AG1818	17.5	17.5

(continued on next page)

(continued from previous page)

DOOR SIZE CHART			
ITEM NO.	**CABINET**	**WIDTH**	**HEIGHT**
DR-B18	B18, VB18, VSDL36, VSDR36	17.5	21.5
DR-W1830	W1830, BW3030, P1884	17.5	28.75
DR-W1836	W1836, BW3036, P1890	17.5	34.75
DR-W1839	W1839, BW3039, P1893	17.5	37.75
DR-W1842	W1842, BW3042, P1896	17.5	40.75
DR-P1884	P1884, P1890, P1893, P1896	17.5	49
DR-W3612	W3612, W361224	17.6875	10.75
DR-W3615	W3615	17.6875	13.75
DR-W3618	W3618, W361824, SBFH36	17.6875	16.75
DR-W3621	W362124	17.6875	19.75
DR-B36	B36, SB36, V36, VSB36	17.6875	21.5
DR-W3624	W3624, W362424	17.6875	22.75
DR-W3630	W3630	17.6875	28.75
DR-W3636	W3636	17.6875	34.75
DR-W3639	W3639	17.6875	37.75
DR-W3642	W3642	17.6875	40.75
DR-W3912	W3912	19.1875	10.75
DR-W3915	W3915	19.1875	13.75
DR-W3918	W3918	19.1875	16.75
DR-B39	B39	19.1875	21.5
DR-W3930	W3930	19.1875	28.75
DR-W3936	W3936	19.1875	34.75
DR-W3939	W3939	19.1875	37.75
DR-W2112	W2112, W4212	20.5	10.75
DR-W2115	W2115, W4215	20.5	13.75
DR-W2118	W2118, W4218	20.5	16.75
DR-AG2118	AG2118	20.5	17.5
DR-B21	B21, BB48	20.5	21.5
DR-W2130	W2130, W4230, P2184	20.5	28.75
DR-W2136	W2136, W4236, P2190	20.5	34.75
DR-W2139	W2139, W4239, P2193	20.5	37.75
DR-W2142	W2142, P2196	20.5	40.75
DR-P2184	P2184, P2190, P2193, P2196	20.5	49
DR-B42	B42, SB42, V42, VSB42	20.6875	21.5
DR-DSB42	DSB42, CSF42	23	21.5
DR-AG2418	AG2418	23.5	17.5
DR-VSB48	VSB48, VDB60	23.5	21.5
DR-BW3630	BW3630, BEP2430-1	23.5	28.75
DR-BW3636	BW3636	23.5	34.75
DR-BW3639	BW3639	23.5	37.75
DR-BW3642	BW3642	23.5	40.75

DRAWER FRONT SIZE CHART			
ITEM NO.	**CABINET**	**WIDTH**	**HEIGHT**
DF-KD30	KD30	23.5	4.25
DF-KD36	KD36	29.5	4.25
DF-VSB36	VSB36 (left/right)	10	6.75
DF-B12	B12, DB12-3 (top), DB12-4 (top&mids), VB12, VDB12 (top), VDB60 (center), VSB42 (left/right), VSB48 (left/right)	11.5	6.75
DF-B15	B15, BB42, DB15-3 (top), DB15-4 (top&mids), DSB36, VB15, VDB15 (top), VSDL30 (top), VSDR30 (top), VSB60 (top)	14.5	6.75
DF-B30	B30, SB30, V30	14.6875	6.75
DF-VSB36-CENTER	VSB36 (center)	15.125	6.75
DF-B33	B33, SB33, V33	16.1875	6.75
DF-B18	B18, DB18-3 (top), DB18-4 (top&mids), DDB18 (top), VB18 (top), VDB18 (top), VSB42 (center), VSDL36 (top), VSDR36 (top)	17.5	6.75
DF-B36	B36, SB36, V36	17.6875	6.75
DF-B39	B39	19.1875	6.75
DF-B21	B21, BB48, DB21-3 (top), DB21-4 (top&mids), VDB21 (top)	20.5	6.75
DF-B42	B42, SB42, V42	20.6875	6.75
DF-DSB42	DSB42, CSF42	23	6.75
DF-B24	B24-2, DB24-3 (top), DB24-4 (top&mids), V24-2, VDB24 (top), VDB60 (left/right), VSB48 (center)	23.5	6.75
DF-B27	B27, V27	26.5	6.75
DF-B30-1	DB30-3 (top), DB30-4 (top&mids), VSB60 (center)	29.5	6.75
DF-OC3384D	OC3384D, OC3390D, OC3396D	32.5	6.75
DF-B36-1	DB36-3 (top), DB36-4 (top&mids)	35.5	6.75
DF-VDB60	VDB60 (btm)	11.5	7
DF-DB15-4	DB15-4 (btm)	14.5	7
DF-DB18-4	DB18-4 (btm)	17.5	7
DF-DB21-4	DB21-4 (btm)	20.5	7
DF-DB24-4	DB24-4 (btm)	23.5	7
DF-DB30-4	DB30-4 (btm)	29.5	7
DF-DB36-4	DB36-4 (btm)	35.5	7
DF-DB12	DB12-3 (mid&btm), VDB12 (mid&btm)	11.5	10.5
DF-DB15	DB15-3 (mid&btm), VDB15 (mid&btm), VSDR30 (mid&btm), VSDL30 (mid&btm)	14.5	10.5
DF-DB18	DB18-3 (mid&btm), VDB18 (mid&btm), VSDR36 (mid&btm), VSDL36 (mid&btm)	17.5	10.5
DF-DB21	DB21-3 (mid&btm), VDB21 (mid&btm)	20.5	10.5
DF-DB24	DB24-3 (mid&btm), VDB24 (mid&btm)	23.5	10.5
DF-DB27	DB27-3 (mid&btm)	26.5	10.5
DF-DB30	DB30-3 (mid&btm)	29.5	10.5
DF-DB33	DB33-3 (mid&btm)	32.5	10.5

(continued on next page)

(continued from previous page)

DRAWER FRONT SIZE CHART			
ITEM NO.	**CABINET**	**WIDTH**	**HEIGHT**
DF-DB36	DB36-3 (mid&btm)	35.5	10.5
DF-BMD24	BMD24	23.5	11
DF-BMD27	BMD27	26.5	11
DF-BM30	BM30	29.5	11
DF-DB24-2-TOP	DB24-2 (top)	23.5	14
DF-DB30-2-TOP	DB30-2 (top)	29.5	14
DF-DB36-2-TOP	DB36-2 (top)	35.5	14
DF-DB24-2-BTM	DB24-2 (btm)	23.5	14.25
DF-DB30-2-BTM	DB30-2 (btm)	29.5	14.25
DF-DB36-2-BTM	DB36-2 (btm)	35.5	14.25
DF-DDB18	DDB18 (btm)	17.5	16.5

Doors and drawer fronts are available for purchase. (list prices)
Doors - $110 per sq. ft
Drawer Fronts - $130 per sq. ft

CABINET OPENING DIMENSIONS

River Run Cabinetry

Kitchen Frame Openings

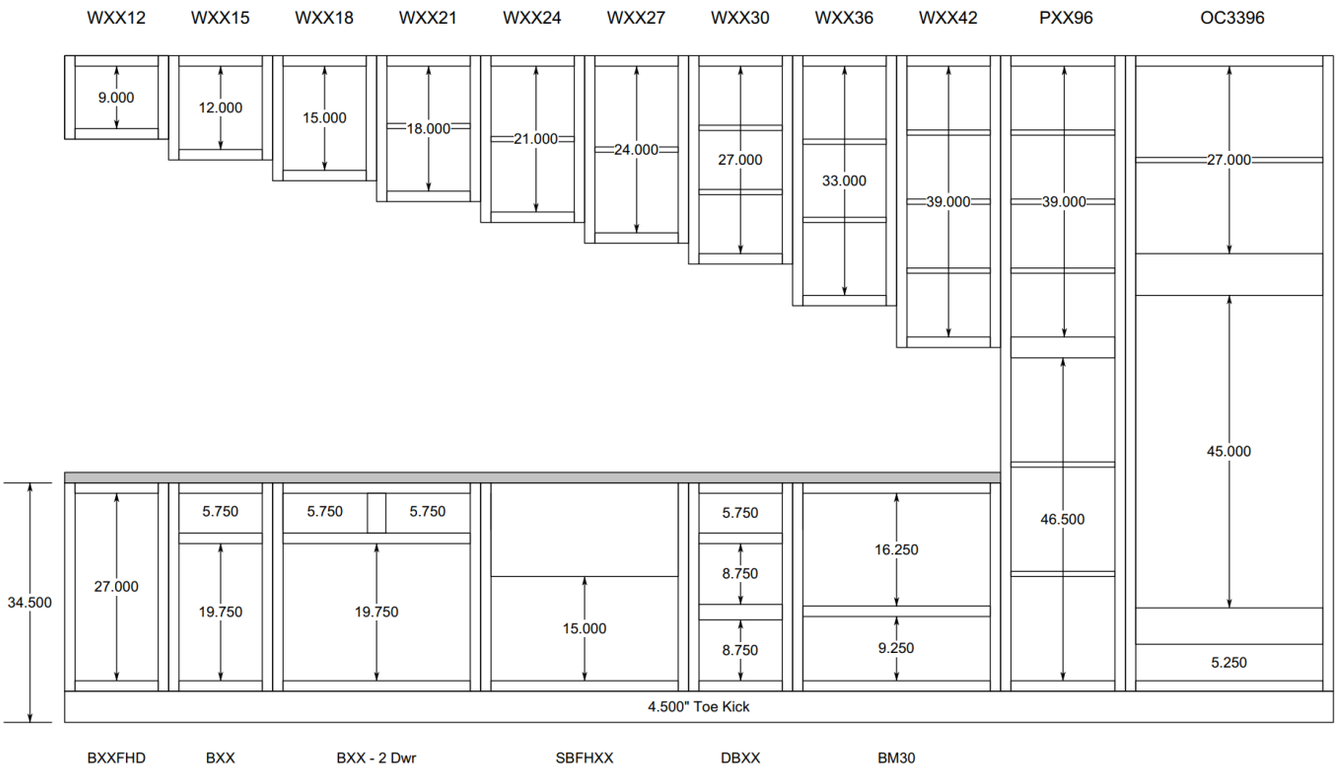

Vanity Frame Openings

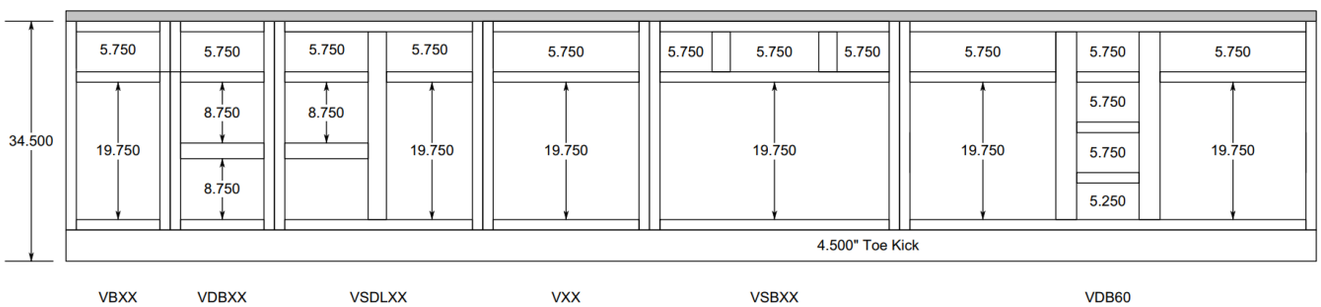

CUSTOM MODIFICATIONS

River Run Cabinetry

<u>Note</u>: Modifications extend lead times except where noted in description.

MOD. CODES & DESCRIPTIONS	EXAMPLE	LIST PRICES
RD **Reduce Depth** of cabinet (1″ increments) base - 12″ minimum depth wall - 4″ minimum depth **Reduce Depth** of roll out tray	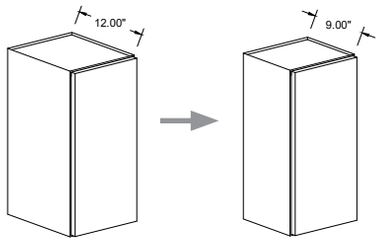 pictured: W1230 **reduced depth** to 9″	cab + 300 ROT + 167
ID **Increase Depth** of wall and vanity cabinet (1″ increments) walls - 24″ depth maximum bookcase - 18″ depth maximum bases - not available	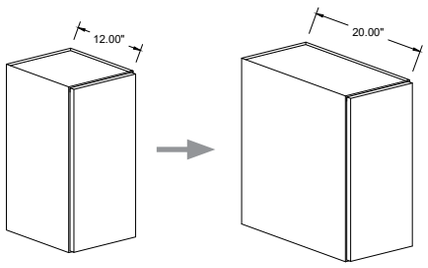 pictured: W1230 **increased depth** to 20″	depth 24″ or < = cab + 300 depth > 24″ wide = cab + 460 bookcase up to 15″ deep = cab x 1.25 bookcase > 15″ deep = cab x 1.5
BTKR or L or B **Recess Toe Kick on Right <u>or</u> Left <u>or</u> Back** of base, pantry, or vanity cabinet available in B15 and larger base cabinets	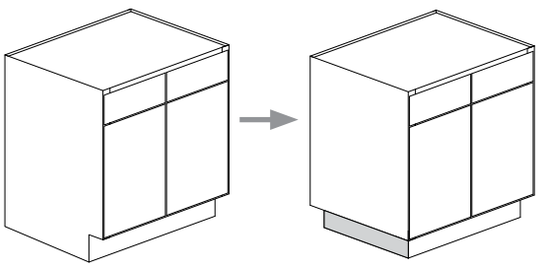 pictured: V27 **recess toe kick added to left**	cab + 283
BTKRL **Recess Toe Kick on Right <u>and</u> Left** of base, pantry, or vanity cabinet available in B18 and larger base cabinets	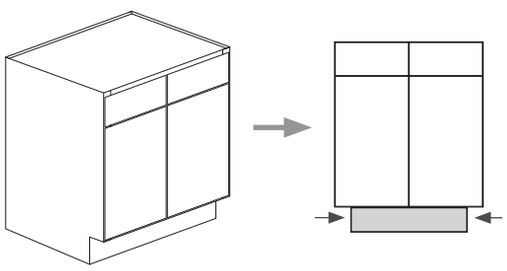 pictured: V27 **recess toe kick added to right and left**	cab + 417

MOD. CODES & DESCRIPTIONS	EXAMPLE	LIST PRICES
BTKN **Toe Kick Removed** from base, pantry, or vanity cabinet (height less 4½")	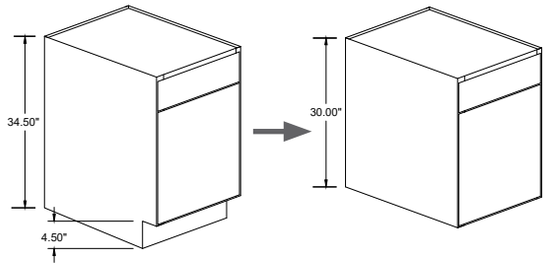 pictured: B18 **toe kick removed**	cab + 210
WTKF **Add Toe Kick to Wall Cabinet with Toe Kick Space at Front only** (height plus 4½")	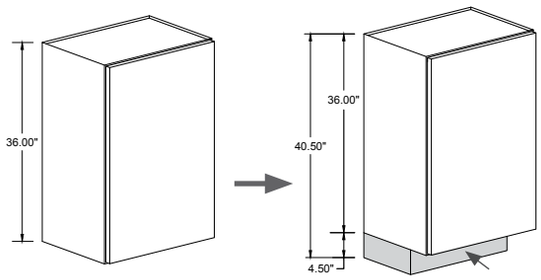 pictured: W1836 **toe kick added with space at front only**	cab + 417
WTKR or L **Add Toe Kick to Wall Cabinet with Toe Kick Space to Right <u>or</u> Left** (height plus 4½")	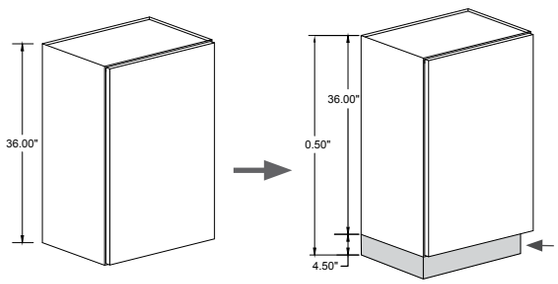 pictured: W1836 **toe kick added with space at right**	cab + 417
WTKRL **Add Toe Kick to Wall Cabinet with Toe Kick Space to Right <u>and</u> Left** (height plus 4½")	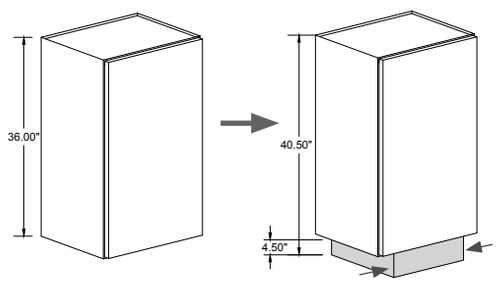 pictured: W1836 **toe kick added with space at right and left**	cab + 483
WTKFR or L **Add Toe Kick to Wall Cabinet with Toe Kick Space to Front <u>and</u> Right <u>or</u> Left** (height plus 4½")	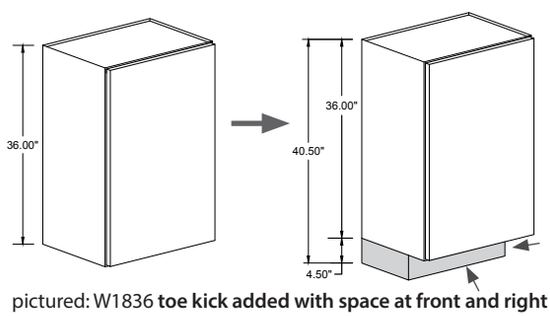 pictured: W1836 **toe kick added with space at front and right**	cab + 483

MOD. CODES & DESCRIPTIONS	EXAMPLE	LIST PRICES
WTKFRL **Add Toe Kick to Wall Cabinet with Toe Kick Space to Front, Right, <u>and</u> Left** (height plus 4½")	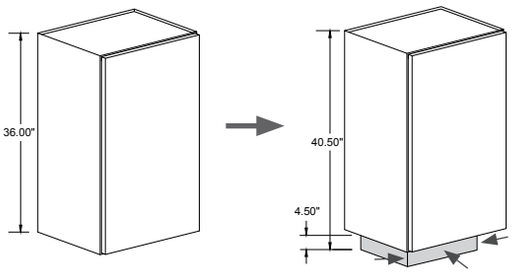 pictured: W1836 **toe kick added with space at front, right and left (WTKFRL)**	cab + 483
TP **Tri-Pack** - face frame, drawer front(s), and door(s) only *Does not extend lead time.*	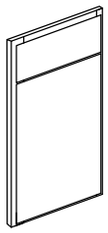	75% x cab. *
BO **Box Only** - Does not include drawer box, hardware, doors, drawer fronts or shelves. *Does not extend lead time.*	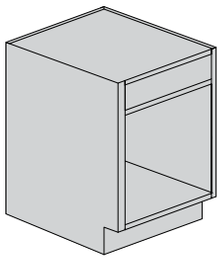 pictured: B24-2 **case only**	60% x cab. *
NO FRONTS Includes hardware, shelves, and drawer box. Does not include doors or drawer fronts. *Does not extend lead time.*	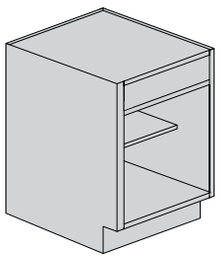 pictured: B24-2 **no front**	85% x cab. *
FI **Cabinet with Finished Interior**	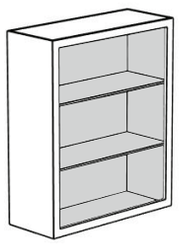 pictured: W3030 - **finished interior**	cab + 420

MOD. CODES & DESCRIPTIONS	EXAMPLE	LIST PRICES
FIT **Cabinet with Finished Interior (Talls)**	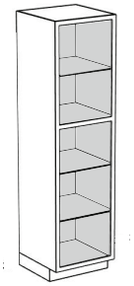 pictured: P2490 **finished interior (tall)**	cab + 533
PCR or L **Pipe Chase Cut-Out on Right <u>or</u> Left Corner** (width x depth, location)	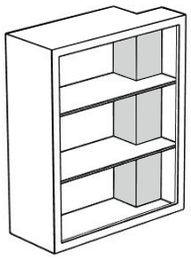 pictured: W3030 **pipe chase cut-out on right (back)**	cab + 983
PCM **Pipe Chase Cut-Out in Middle** (width x depth, location)	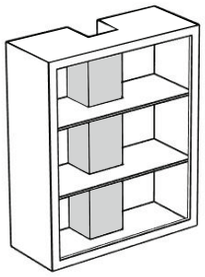 pictured: W3030 **pipe chase cut-out in middle (back)**	cab +1,250
ESR or L **Install Extended Stile on Right <u>or</u> Left** side of cabinet (This modification adds 3″ on either side) 4.5″ total stile width *Field Trimmable*	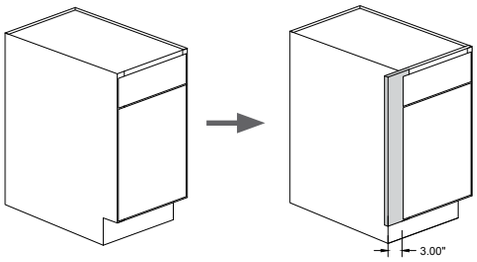 pictured: B15 **extended stile on left 3″** (making it 18″ wide)	3″ ext. = cab + 248
ESRL **Install Extended Stile on Right <u>and</u> Left** sides of cabinet (This modification adds 3″ to both sides.) 4.5″ total stile width *Field Trimmable*	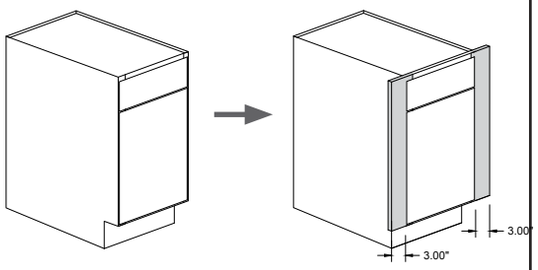 pictured: B15 **extended stile on right <u>and</u> left 3″ on both sides**	3″ ext. on both sides = cab + 434

MOD. CODES & DESCRIPTIONS	EXAMPLE	LIST PRICES
PN **Peninsula Cabinet**	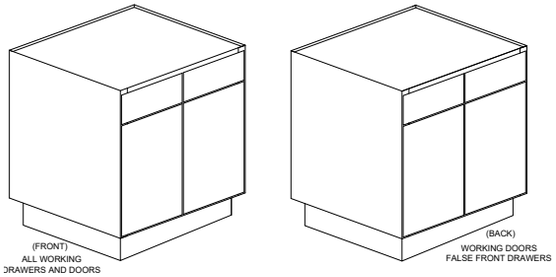 pictured: B27 **peninsula cabinet**	1.5 x cab. *
WEP **Factory Installed Wall End Panels** *For loose WEPs - see Wall Section* **BEP** **Factory Installed Base End Panels** *For loose BEP - see Base Section*	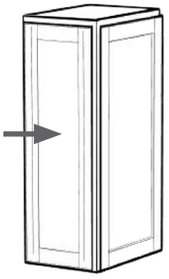 pictured: W1230 **Wall End Panel (WEP)**	cab + WEP + 90 cab + BEP + 90
FDS **Install Full Depth Shelf** in a base cabinet *Does not extend lead time.*	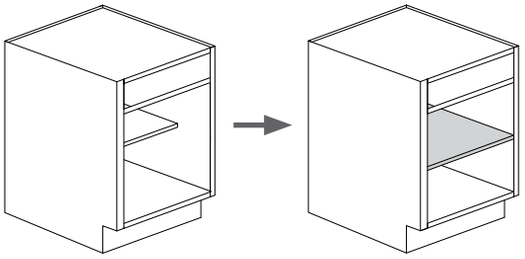 pictured: B24-2 **installed full depth shelf**	cab + 125
2SH **Install Second Shelf** in a base cabinet *Does not extend lead time.*	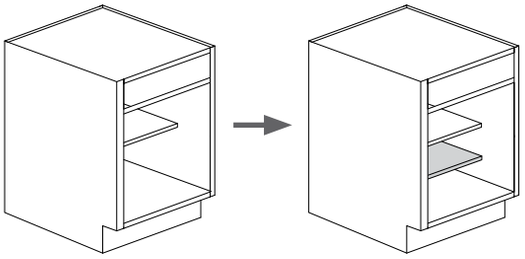 pictured: B24-2 **installed second shelf**	cab + 100
PG **Prep for Glass** - remove center panel in one door or **PG2** (2 doors) (Not available in StoneRidge) (Only available in top doors on pantry cabinets)	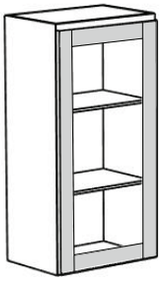 pictured: W1230 **Prep for Glass**	cab + 163 (1 door) cab + 326 (2 doors)

MOD. CODES & DESCRIPTIONS	EXAMPLE	LIST PRICES
BD **Reversed Base Cabinet** with drawer at the bottom of the cabinet For a functioning bottom drawer, select a base or vanity base, <u>not</u> a sink base or vanity sink base.	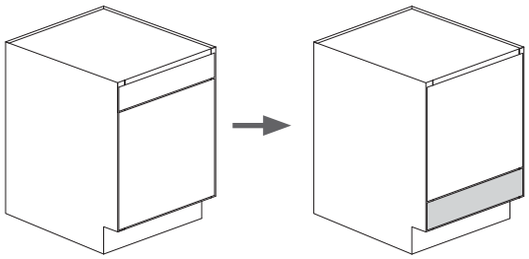 pictured: B21 **reversed base cabinet (drawer at the bottom)**	cab + 333
Finished Ends (cost per side)	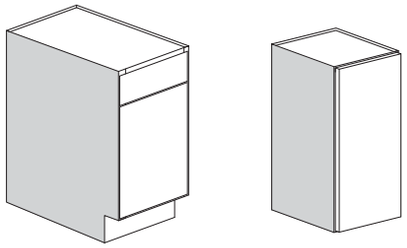 pictured: B15 **finished left** and W1230 **finished left**	cab + 56 (wall) cab + 95 (base) cab + 225 (tall 96)
SB **Sink Base** Converts Top Drawer to False Front in Drawer Base or Vanity Drawer Base	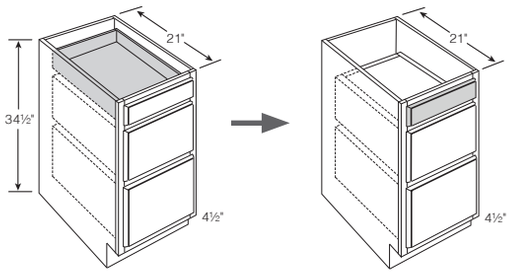 pictured: VDB- **top drawer converted to false front**	cab + 0 (no additional charge)
DOVETAIL DRAWER BOX (illustration of corner) This is an Upgrade Option.	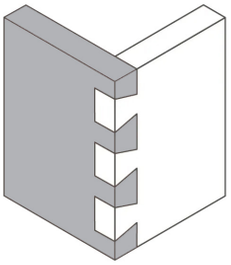	33 per box

SUMMARY MODIFICATIONS & SUGGESTED LIST PRICES		
MOD. CODES	**DESCRIPTIONS**	**LIST PRICES**
RD	**Reduce Depth** of cabinet base (12" minimum); wall (4" minimum) - 1" increments **Reduce Depth** of roll out tray	cab + 300 ROT+167
ID	**Increase Depth** of wall and vanity cabinet (24" maximum); bookcase (18" maximum) - 1" increments	see page CM-1
BTKR or L or B	**Recess Toe Kick on Right or Left or Back** of base, pantry, or vanity cabinet	cab + 283
BTKRL	**Recess Toe Kick on Right and Left** of base, pantry, or vanity cabinet	cab + 417
BTKN	**Toe Kick Removed** from base, pantry, or vanity cabinet (height less 4½")	cab + 210
WTKF	**Add Toe Kick to Wall Cabinet with Toe Kick Space at Front only** (height plus 4½")	cab + 417
WTKR or L	**Add Toe Kick to Wall Cabinet with Toe Kick Space to Right or Left** (height plus 4½")	cab + 417
WTKRL	**Add Toe Kick to Wall Cabinet with Toe Kick Space to Right and Left** (height plus 4½")	cab + 483
WTKFR or L	**Add Toe Kick to Wall Cabinet with Toe Kick Space to Front and Right or Left** (height plus 4½")	cab + 483
WTKFRL	**Add Toe Kick to Wall Cabinet with Toe Kick Space to Front, Right, and Left** (height plus 4½")	cab + 483
TP #	**Face Frame Only** - face frame, drawer front(s), and door(s) only	75% x cab. *
BO #	**Box Only**	60% x cab. *
NOFRONTS#	**No Doors/Drawer Fronts -** includes hardware, shelves and drawer	85% x cab. *
FI	**Cabinet with Finished Interior**	cab + 420
FIT	**Tall Cabinet with Finished Interior**	cab + 533
PCR or L	**Pipe Chase Cut-Out on Right or Left Corner** (width x depth)	cab + 983
PCM	**Pipe Chase Cut-Out in Middle** (width x depth, location)	cab +1,250
ESR or L	**Install Extended Stile on Right or Left** side of cabinet (Adds 3" to either side) Field Trimmable	3" ext. = cab + 248
ESRL	**Install Extended Stile on Right and Left** sides of cabinet (Adds 3" to both sides) Field Trimmable	3" ext. = cab + 434
PN	**Peninsula Cabinet**	1.5 x cab. *
WEP or BEP	**Factory Applied Wall or Base Panels**	cab + WEP/BEP + 90
FDS #	**Install Full Depth Shelf** in a base cabinet	cab + 125
2SH #	**Install Second Shelf** in a base cabinet	cab + 100
PG	**Prep for Glass** - remove center panel in door (not available in StoneRidge)	cab + 163
BD	**Reversed Base Cabinet** with drawer at the bottom of the cabinet	cab + 333

NOTE: Modifications extend lead times, except modifications noted with "#".

(continued on next page)

SUMMARY MODIFICATIONS & SUGGESTED LIST PRICES *(continued)*		
MOD. CODES	**DESCRIPTIONS**	**LIST PRICES**
FINISHED END #	**Finished Ends** (cost per side)	cab + 56 (wall) cab + 95 (base) cab + 225 (tall 96)
SB #	Converts top drawer to false front (DBs or VDBs)	No Charge
DOVETAIL DRAWER BOX #	Upgrade from the standard EuroBox (No Charge) to the Dovetail Drawer Box	$33 per Box

NOTE: Modifications extend lead times, except modifications noted with "#".

WALL CABINETS

Wall Cabinet 12" High, 1 Doors

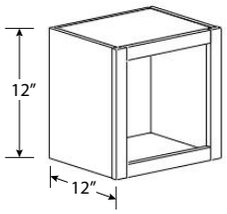

	1	2	3	4	5
W1212	219	229	239	249	259
W1512	246	258	269	280	291
W1812	284	297	310	323	335
W2112	311	325	340	354	368

- No Shelf
- Not Available in Hampton Door Styles

Wall Cabinet 12" High, 2 Doors

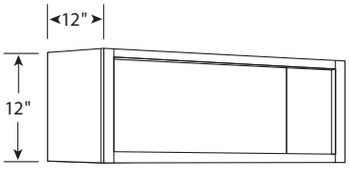

	1	2	3	4	5
W2412 #	339	354	370	385	400
W2712 #	366	383	400	416	433
W3012	412	430	449	468	486
W3312 #	430	449	469	489	508
W3612	448	469	489	509	530
W3912	467	488	509	530	551
W4212 * #	476	497	519	541	561
W361224 (24" Deep)	513	536	559	583	606

- No Shelf
* Has 3″ Center Stile
# Not Available in Hampton Door Styles

Wall Cabinet 15" High, 1 Door

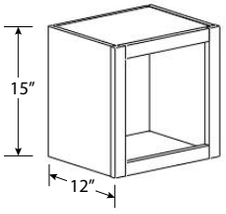

	1	2	3	4	5
W1215	274	286	299	311	324
W1515	284	297	310	323	335
W1815	311	325	340	354	368
W2115	366	383	400	416	433

- No Shelf
- Not Available in Hampton Door Styles

WALL CABINETS

Wall Cabinet 15" High, 2 Doors

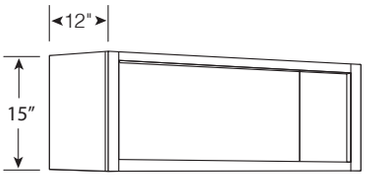

	1	2	3	4	5
W2415#	366	383	400	416	433
W2715#	394	412	430	448	465
W3015	439	459	479	499	519
W3315	457	477	498	519	540
W3615	475	496	518	540	561
W3915#	494	516	539	561	584
W4215* #	504	527	550	572	595

- No Shelf
* Has 3" Center Stile
# Not Available in Hampton Door Styles

Wall Cabinet 18" High, 1 Doors

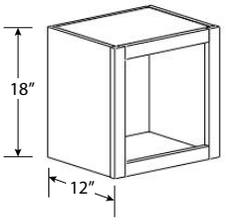

	1	2	3	4	5
W1218	301	315	329	343	356
W1518	311	325	340	354	368
W1818	366	383	400	416	433
W2118	411	430	449	468	486

- No Shelf

Wall Cabinet 18" High, 2 Doors

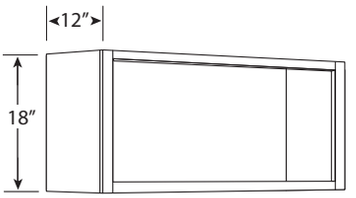

	1	2	3	4	5
W2418 #	390	407	425	443	460
W2718 #	421	440	459	478	497
W3018	467	488	509	530	551
W3318	485	507	529	551	573
W3618	505	528	551	573	596
W3918 #	525	549	573	596	620
W4218 * #	535	560	584	608	633
W361824 (24" Deep)	549	574	599	624	649

- No Shelf
* Has 3" Center Stile
# Not Available in Hampton Door Styles

WALL CABINETS

Wall Cabinet 21" High, 2 Doors

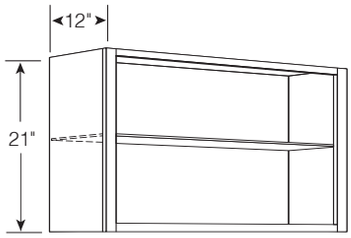

	1	2	3	4	5
W3021	494	516	539	561	584

- One Shelf

Wall Cabinet 21" High X 24" Deep, 2 Doors

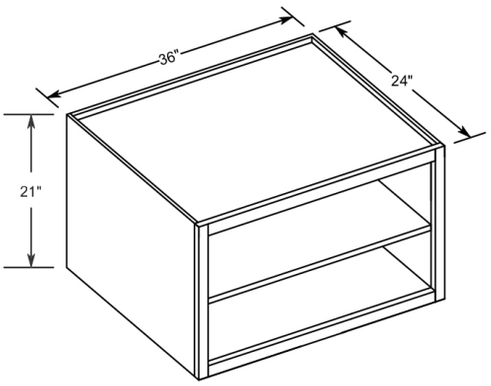

	1	2	3	4	5
W362124	705	737	769	801	833

- One Shelf
- Not Available in Hampton

Wall Cabinet 24" High, 2 Doors

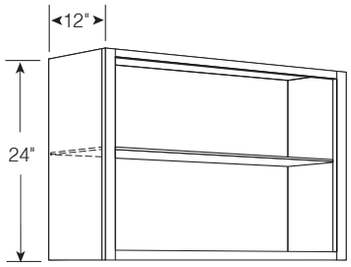

	1	2	3	4	5
W3024	521	545	569	593	616
W3324	549	574	599	624	649
W3624	595	622	649	676	703

- One Shelf

Wall Cabinet 24" High X 24" Deep, 2 Doors

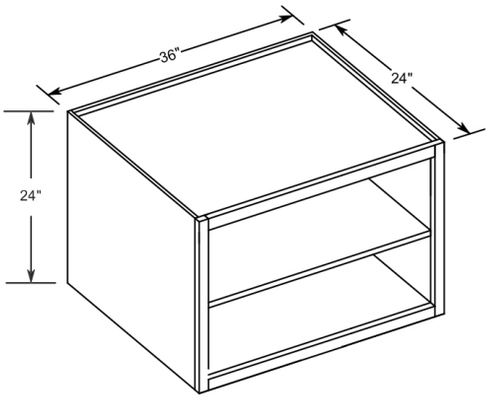

	1	2	3	4	5
W362424	751	785	820	854	888

- One Shelf
- Refrigerator Cabinet

WALL CABINETS

Wall Cabinet 27" High, 2 Doors

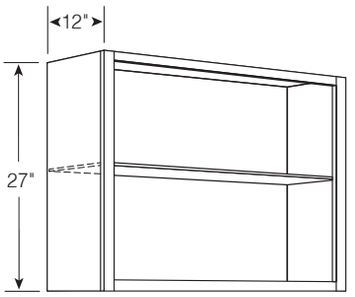

	1	2	3	4	5
W3027	568	593	619	645	671

- One Shelf

Wall Cabinet 30" High, 1 Door

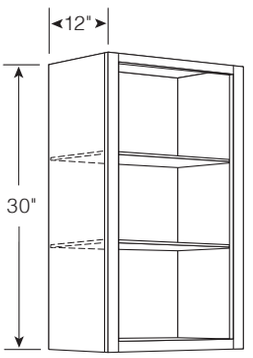

	1	2	3	4	5
W0930	297	311	324	338	351
W1230	339	354	370	385	400
W1530	366	383	400	416	433
W1830	411	430	449	468	486
W2130	453	474	494	515	536

- Two Shelves

Wall Cabinet 30" High, 2 Doors

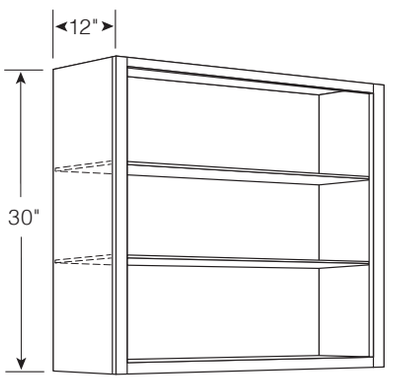

	1	2	3	4	5
W2430-2	508	531	554	578	601
W2730	568	593	619	645	671
W3030	604	631	659	686	714
W3330	646	675	704	734	763
W3630	722	754	787	820	853
W3930	741	775	809	843	876
W4230*	760	795	829	864	898

- Two Shelves
* Has 3" Center Stile

WALL CABINETS

Wall Cabinet 36" High, 1 Door

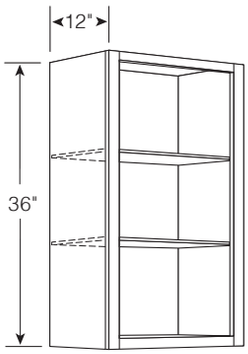

	1	2	3	4	5
W0936	356	373	389	405	421
W1236	403	421	439	458	476
W1536	416	435	454	473	491
W1836	453	474	494	515	536
W2136	504	527	550	573	595

- Two Shelves

Wall Cabinet 36" High, 2 Doors

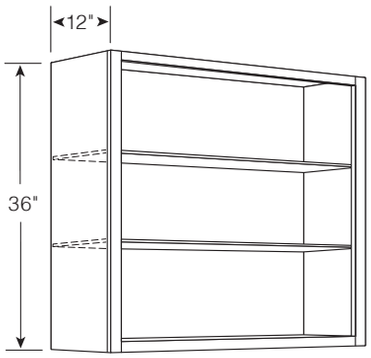

	1	2	3	4	5
W2436-2	581	607	634	660	686
W2736	641	670	700	729	758
W3036	722	754	787	820	853
W3336	765	799	834	869	904
W3636	783	819	854	890	926
W3936	814	851	888	925	962
W4236 *	830	868	906	944	981

- Two Shelves
* Has 3" Center Stile

Wall Cabinet 39"High, 1 Door

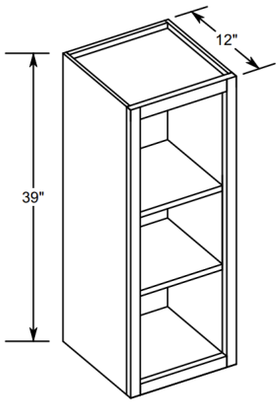

	1	2	3	4	5
W0939	384	401	419	436	454
W1239	435	454	474	494	514
W1539	449	469	490	510	530
W1839	494	516	539	561	584
W2139	545	569	594	619	644

- Two Shelves

WALL CABINETS

Wall Cabinet 39" High, 2 Doors

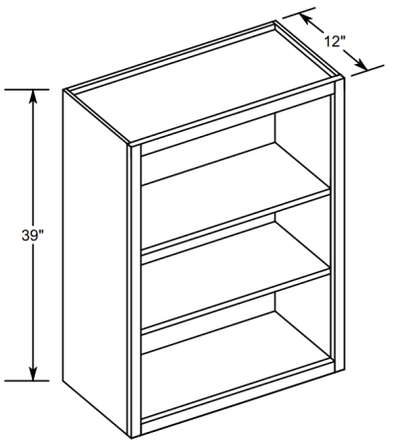

	1	2	3	4	5
W2439-2	650	680	709	739	768
W2739	688	719	750	781	813
W3039	760	795	829	864	898
W3339	801	837	874	910	946
W3639	847	886	924	963	1,001
W3939	856	895	934	973	1,011
W4239 *	903	944	985	1,026	1,067

- Two Shelves
* Has 3" Center Stile

Wall Cabinet 42" High, 1 Door

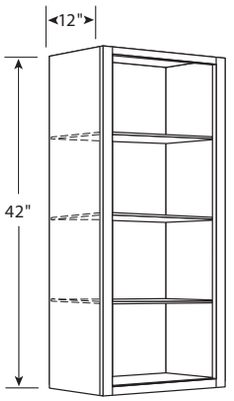

	1	2	3	4	5
W0942	414	432	451	470	489
W1242	458	478	499	520	541
W1542	485	507	529	551	573
W1842	549	574	599	624	649
W2142	595	622	649	676	703

- Three Shelves

Wall Cabinet 42" High, 2 Doors

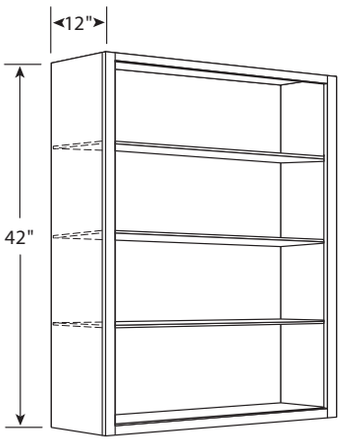

	1	2	3	4	5
W2442-2	705	737	769	801	833
W2742	769	804	839	874	909
W3042	801	837	874	910	946
W3342	857	896	935	974	1,013
W3642	883	923	964	1,004	1,044

- Three Shelves

CORNER WALL CABINETS

Easy Reach Corner Wall Cabinet, 24" Wide

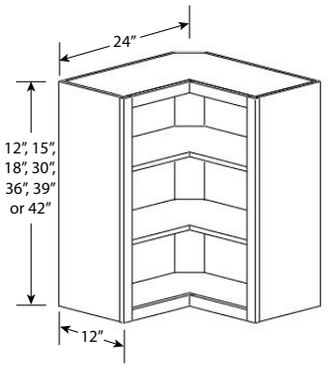

	1	2	3	4	5
ERCW2412 (0)	586	613	640	666	693
ERCW2415 (0)	606	634	661	689	716
ERCW2418 (0)	615	643	671	699	727
ERCW2430 (2)	829	867	905	943	980
ERCW2436 (2)	891	932	972	1,013	1,053
ERCW2439 (2)	949	992	1,036	1,079	1,122
ERCW2442 (3)	1,016	1,063	1,109	1,155	1,201

- Double Hinged Doors
- Not Available in Hampton
- (# of shelves)

Corner Wall Cabinet 15” High, 1 Door

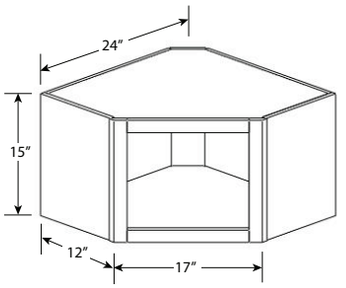

	1	2	3	4	5
CW2415	411	430	449	468	486

Corner Wall Cabinet 30” High, 1 Door

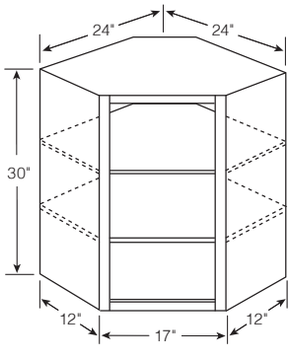

	1	2	3	4	5
CW2430	733	766	799	833	866

- Two Shelves

Corner Wall Cabinet 36" High, 1 Door

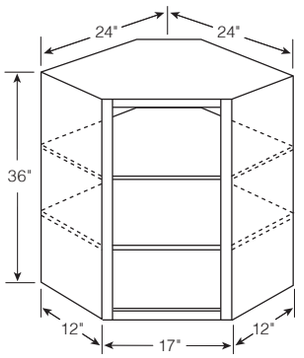

	1	2	3	4	5
CW2436	760	795	829	864	898

- Two Shelves

CORNER WALL CABINETS

Corner Wall Cabinet 36" High x 15" Deep, 1 Door

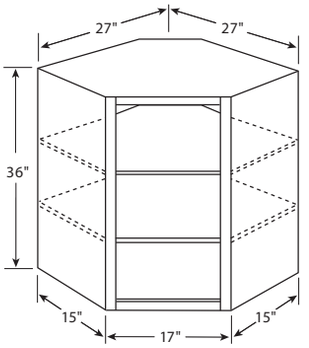

	1	2	3	4	5
CW2736	836	874	912	950	988

- Two Shelves

Corner Wall Cabinet 39" High, 1 Door

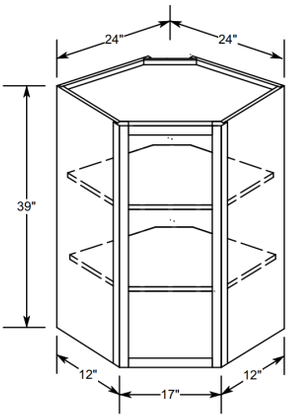

	1	2	3	4	5
CW2439	779	814	850	885	920

- Two Shelves

Corner Wall Cabinet 39" High x 15" Deep, 1 Door

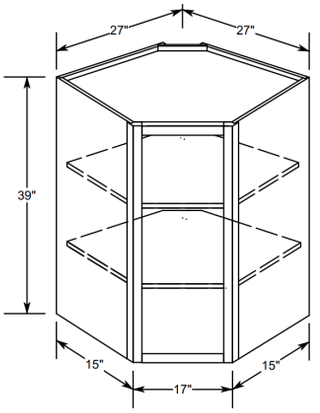

	1	2	3	4	5
CW2739	857	896	935	974	1,013

- Two Shelves

CORNER WALL CABINETS

Corner Wall Cabinet 42" High, 1 Door

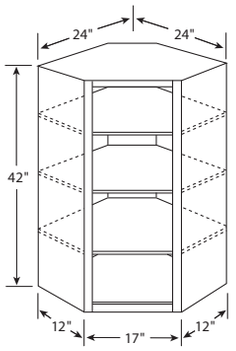

	1	2	3	4	5
CW2442	906	948	989	1,030	1,071

- Three Shelves

Corner Wall Cabinet 42" High x 15" Deep, 1 Door

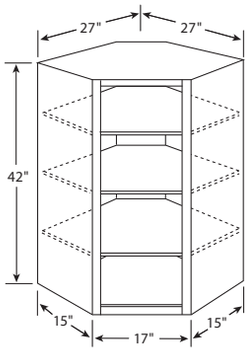

	1	2	3	4	5
CW2742	997	1,043	1,088	1,133	1,179

- Three Shelves

BLIND WALL CABINETS

Blind Wall Cabinet 30" High, 1 Door

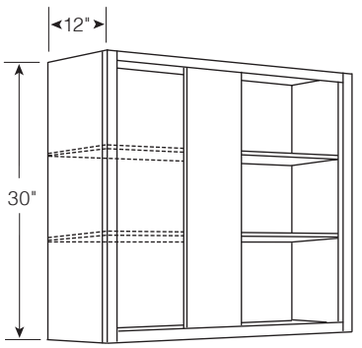

	1	2	3	4	5
BW2430	490	512	534	556	579
BW3030	556	581	606	631	657
BW3630	584	611	637	664	690

- Two Shelves
- Choose Side to Hinge Door
- Stile = 4¾" wide
- Shown: Blind Right with Door on Left

Blind Wall Cabinet 36" High, 1 Door

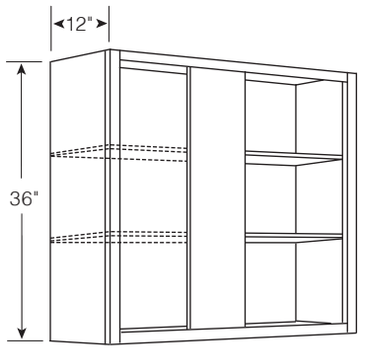

	1	2	3	4	5
BW2436	525	549	572	596	620
BW3036	578	604	630	656	683
BW3636	628	657	685	714	742

- Two Shelves
- Choose Side to Hinge Door
- Stile = 4¾" wide
- Shown: Blind Right with Door on Left

Blind Wall Cabinet 39" High, 1 Door

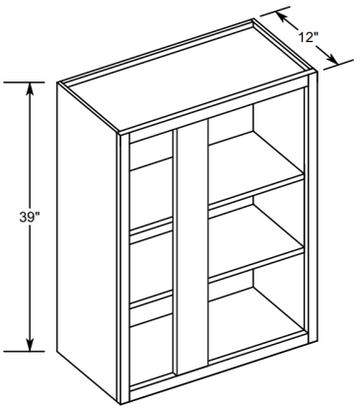

	1	2	3	4	5
BW2439	526	550	574	598	621
BW3039	580	606	632	659	685
BW3639	659	689	719	749	779

- Two Shelves
- Choose Side to Hinge Door
- Stile = 4¾" wide
- Shown: Blind Right with Door on Left

BLIND WALL CABINETS

Blind Wall Cabinet 42"High, 1 Door

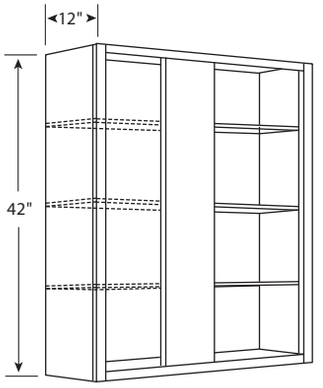

	1	2	3	4	5
BW2442	581	607	634	660	686
BW3042	645	674	703	733	762
BW3642	705	737	769	801	833

- Three Shelves
- Choose Side to Hinge Door
- Stile = 4¾" wide
- Shown: Blind Right with Door on Left

Blind Wall Cabinet Installation Recommendations

By Width

Cabinet SKU	Actual Cabinet Width (A)	Recommeded Install Spacing from Wall (B)	Door opening width (C)
BW24XX	24"	27"	9"
BW30XX	30"	33"	15"
BW36XX	36"	39"	21"

ORDER FILLER SEPARATELY

MEASUREMENTS BASED ON DESIGN USING A 4¾" VERTICAL IN FACE FRAME

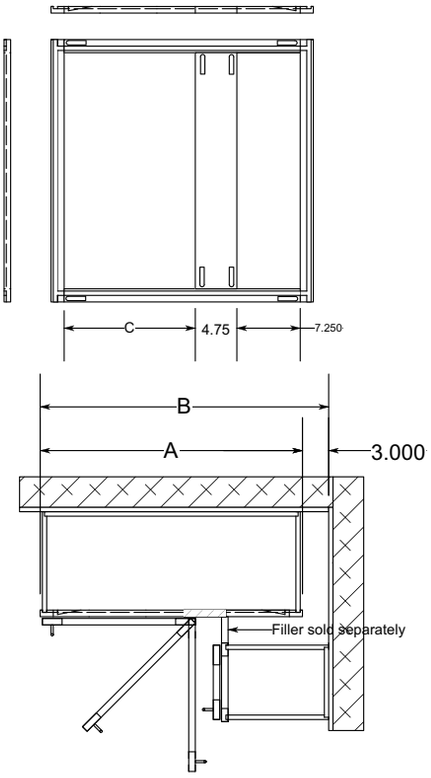

SPECIALTY WALL CABINETS

Wall Cabinet 30" High, ¼ Round Shelves

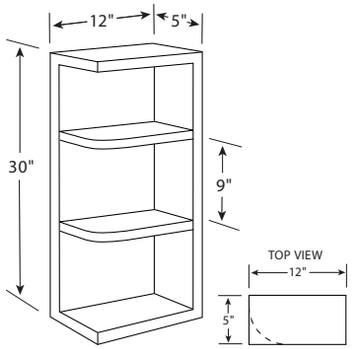

	1	2	3	4	5
WQR630*	387	405	423	440	458

- Two Fixed Shelves
* Only Available as Custom Cabinet

Wall Cabinet 36" High, ¼ Round Shelves

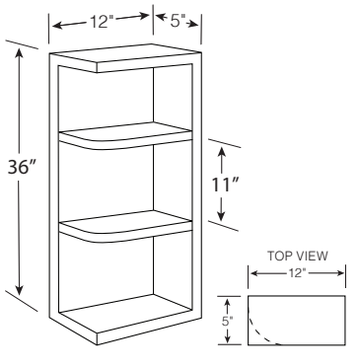

	1	2	3	4	5
WQR636*	413	432	451	469	488

- Two Fixed Shelves
* Only Available as Custom Cabinet

Microwave Wall Cabinet 18" High

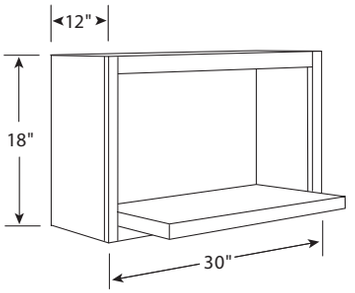

	1	2	3	4	5
MWS3018X12	294	307	320	334	347

- Shelf is 17" Deep
- Opening Dimensions: 27" W x 14¼" H x 17" D
- Finished Interior is Standard

SPECIALTY WALL CABINETS

Microwave Wall Cabinet 33" High

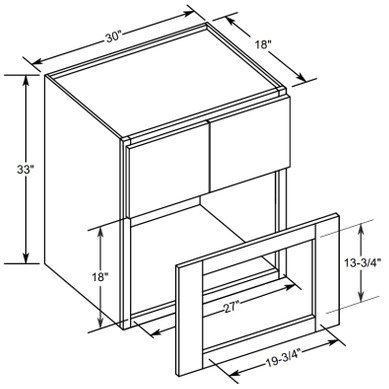

	1	2	3	4	5
WMW303318	592	619	646	673	699

- Supplied with an Overlay Face Frame
- Opening Dimensions: 25" W x 14⅜" H Trimmable
- Finished Interiors and Finished Ends are not Standard and Must be Specified if Desired.

Microwave Wall Cabinet 45" High

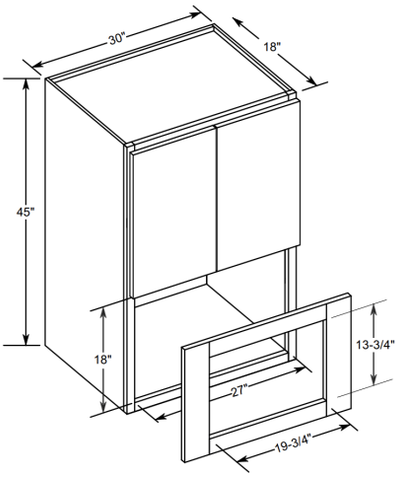

	1	2	3	4	5
WMW304518	619	647	676	704	732

- Supplied with an Overlay Face Frame
- Opening Dimensions: 25" W x 14⅜" H Trimmable
- Finished Interiors and Finished Ends are not Standard and Must be Specified if Desired.

Diagonal Appliance Garage

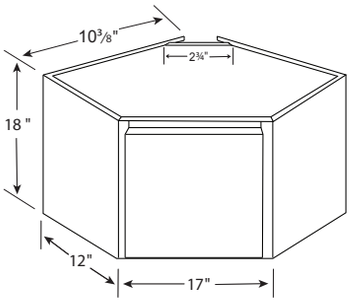

	1	2	3	4	5
ADAG2418	430	450	469	489	508

- Single Door Hinged to Side Stile
- No Bottom Panel, No Under Rail
- Matches CW24 (Length & Width)
- Finished Exterior is Standard

Appliance Garage with Lift Up Door

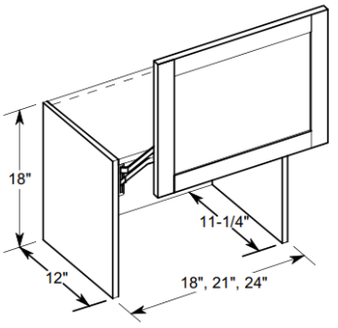

	1	2	3	4	5
AG1818	1,048	1,096	1,144	1,191	1,239
AG2118	1,066	1,114	1,163	1,211	1,260
AG2418	1,085	1,134	1,183	1,233	1,282

SPECIALTY WALL CABINETS

Wall Wine Racks

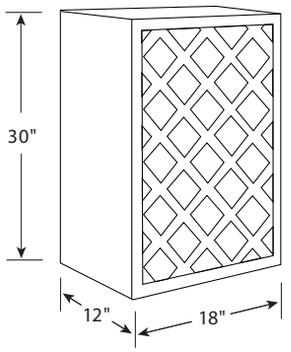

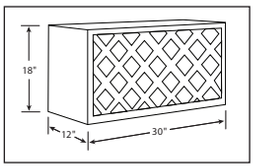

	1	2	3	4	5
WR1830	561	587	612	638	663
WR3018	543	568	593	618	642

- Holds 18 to 20 Bottles
- Finished Interior is Standard

Wine Cubbies

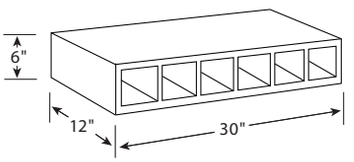

	1	2	3	4	5
WCU30	234	245	256	266	277

- Can be Installed Vertically or Horizontally
- Made of ¾" Veneer Plywood for Interiors
- Finished to Match and Front Edges Banded

Wall Organizers & Shelves, 30" Wide

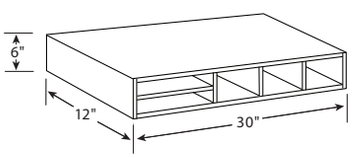

	1	2	3	4	5
WO306	234	245	256	266	277

- Opening Widths are: 10½" and 5¼"
- Made of ¾"Veneer Plywood for Interiors
- Finished to Match and Front Edges Banded

Wall Organizers & Shelves, 36" Wide

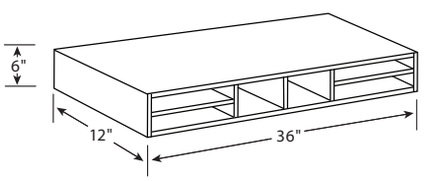

	1	2	3	4	5
WO366	252	263	275	286	298

- Opening Widths are: 10½" and 5½"
- Made of ¾"Veneer Plywood for Interiors
- Finished to Match and Front Edges Banded

SPECIALTY WALL CABINETS

Floating Shelf

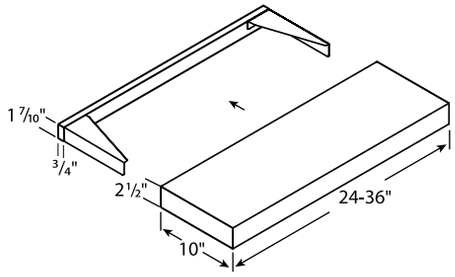

	Stains	Paints
SHELFFLOAT24	394	414
SHELFFLOAT30	413	434
SHELFFLOAT36	452	474
SHELFFLOAT42	492	517
SHELFFLOAT48	536	563
SHELFFLOAT54	585	614
SHELFFLOAT60	638	670

- Comes with Installation Bracket
- Cannot be Modified

Wall End Panel Doors (Loose Decorative Door)

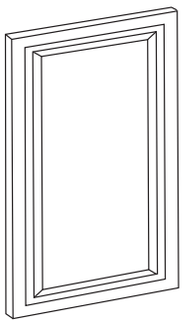

	1	2	3	4	5
WEP1212 (12”x 12”)	107	112	117	122	127
WEP1215 (12”x 15”)	115	120	125	130	135
WEP1218 (12”x 18”)	122	127	133	139	144
WEP1230 (12"x 30")	164	172	179	186	194
WEP1236 (12"x 36")	196	205	214	223	232
WEP1239 (12” x 39”)	210	219	229	239	248
WEP1242 (12"x 42")	224	234	244	254	264

- WEPs Match Door
- Reveals - ½” Less Width and 1¼” Less Height
- Cabinet Side that is Receiving WEP must be Finished or Purchase Skin Separately if Installing in the Field

Wall End Panel Kits

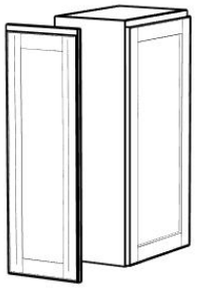

	1	2	3	4	5
WEK1230	228	239	249	259	270
WEK1236	283	296	309	322	335
WEK1242	302	315	329	343	356

- Not Installed
- Kits Include WEP and Finished Skin
- Cabinet purchased separately

SPECIALTY WALL CABINETS

Mullion Doors- 1 Door

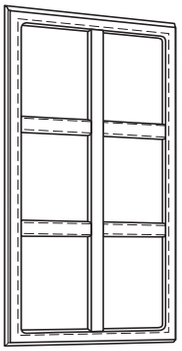

	Stains	Paints
MULLCW2430	169	177
MULLCW2436	204	214
MULLCW2442	239	251
MULLCW2736	204	214
MULLCW2742	239	251
MULLW1530	169	177
MULLW1536	204	214
MULLW1542	239	251
MULLW1830	204	214
MULLW1836	247	259
MULLW1842	289	303

- Glass Not Supplied
- See Online Order Site for Available Colors/Styles
- See Prep for Glass Doors for Additional Options
- Available for Hampton door styles only
- While Supplies Last

Mullion Doors- 2 Doors

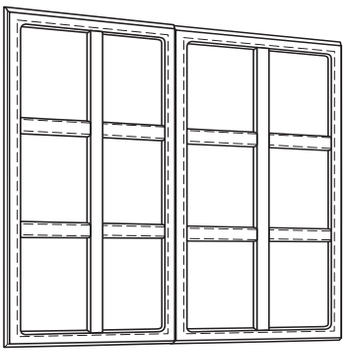

	Stains	Paints
MULLW2430-2	272	286
MULLW2436-2	329	345
MULLW2442-2	386	405
MULLW3030	342	359
MULLW3036	414	435
MULLW3042	485	509
MULLW3630	412	433
MULLW3636	498	523
MULLW3642	584	613

- Glass Not Supplied
- See Online Order Site for Available Colors/Styles
- See Prep for Glass Doors for Additional Options
- Available for Hampton door styles only
- While Supplies Last

BASE CABINETS

Base Cabinet Full Height Single Door

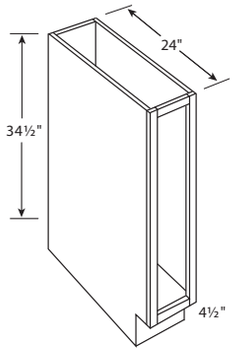

	1	2	3	4	5
B09FHD	408	427	445	464	482
B12FHD	505	528	551	574	597
B15FHD	547	572	596	621	646
B18FHD	570	596	622	648	673
B21FHD	586	613	640	666	693

- No Shelf

Base Cabinet Full Height, 2 Doors

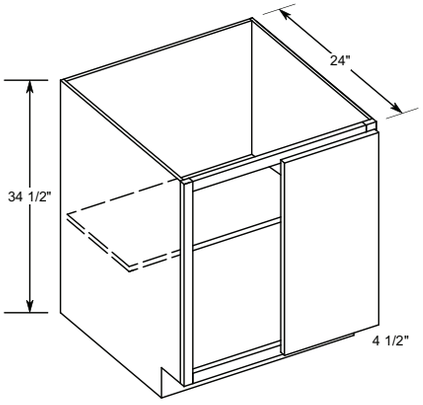

	1	2	3	4	5
B24FHD	680	711	742	773	803
B27FHD	705	737	769	801	833
B30FHD	733	766	799	833	866
B33FHD	763	798	833	868	902
B36FHD	784	820	856	891	927
B39FHD	806	843	880	916	953
B42FHD**	839	877	916	954	992

** Will Have Center Stile

Base Cabinet, 1 Drawer & 1 Door

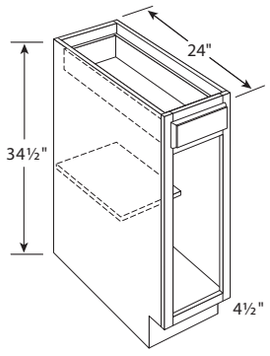

	1	2	3	4	5
B12	612	639	667	695	723
B15	669	699	730	760	790
B18	732	765	798	831	865
B21	774	810	845	880	915

- Can be Modified for Fixed Front

BASE & SINK BASE CABINETS

Base Cabinet, 1 Drawer & 2 Doors

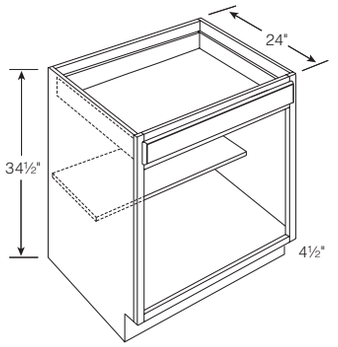

	1	2	3	4	5
B24	857	896	935	974	1,013
B27	898	938	979	1,020	1,061
B30-1	902	943	984	1,025	1,066
B33-1	915	956	998	1,040	1,081
B36-1	967	1,011	1,055	1,099	1,143

Base Cabinet, 2 Drawers & 2 Doors

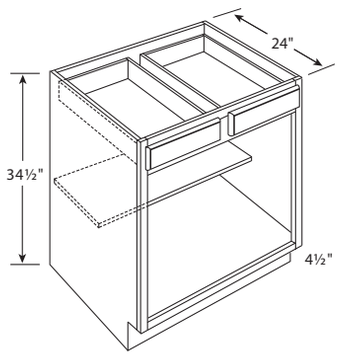

	1	2	3	4	5
B30	916	958	1,000	1,041	1,083
B33	961	1,005	1,049	1,093	1,136
B36	1,026	1,073	1,120	1,166	1,213
B39	1,081	1,130	1,180	1,229	1,278
B42 **	1,132	1,183	1,235	1,286	1,338

** Will Have Center Stile

Sink Base Cabinet, 1 Drawer Front, 2 Doors

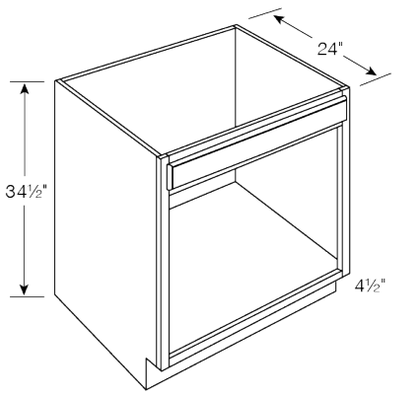

	1	2	3	4	5
SB24	635	664	692	721	750
SB27	647	676	706	735	764
SB30-1	656	685	715	745	775
SB33-1	694	726	757	789	820
SB36-1	736	769	803	836	870

SINK BASE CABINETS

Sink Base Cabinet, 2 Drawer Fronts, 2 Doors

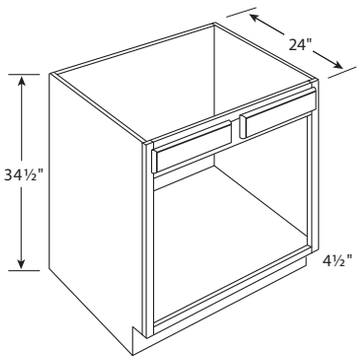

	1	2	3	4	5
SB30	668	698	728	759	789
SB33	706	738	770	803	835
SB36	751	785	820	854	888
SB42 **	836	874	912	950	988

** Will Have Center Stile

Farm House Sink Base

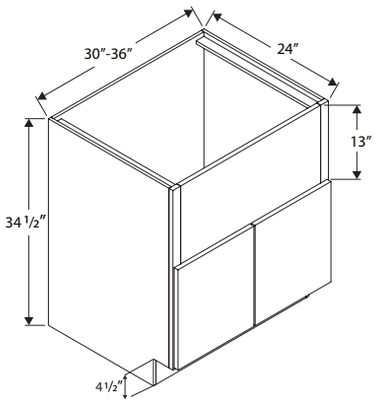

	1	2	3	4	5
SBFH30	631	660	689	718	746
SBFH33	768	803	838	873	907
SBFH36	802	838	875	911	948

- Apron Can be Cut in Field, to Custom Fit Farm Sink

Sink Front Cabinet, 1 Door

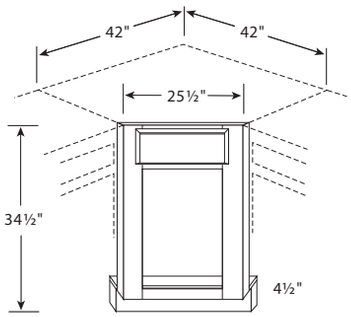

	1	2	3	4	5
CSF42	375	392	409	426	443

Corner Sink Base Cabinet, 1 Door

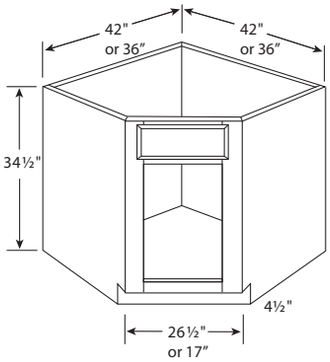

	1	2	3	4	5
DSB36	700	731	763	795	827
DSB42	909	950	991	1,033	1,074

EASY REACH CABINETS

Easy Reach Corner Base Cabinet, 33" Wide

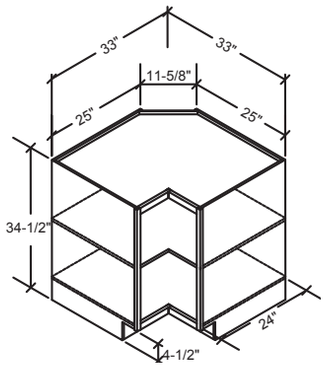

	1	2	3	4	5
ER33	968	1,012	1,056	1,100	1,144

- Double Hinged Doors
- One Shelf
- Lazy Susans may be ordered on the Online Order site (under Custom Modification drop-down menu) with free install

Easy Reach Corner Base Cabinet, 36" Wide

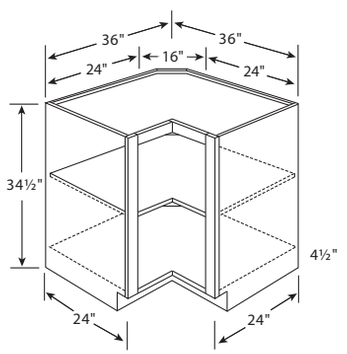

	1	2	3	4	5
ER36	1,201	1,256	1,310	1,365	1,420

- Double Hinged Doors
- One Shelf
- Lazy Susans may be ordered on the Online Order site (under Custom Modification drop-down menu) with free install

BLIND BASE CABINETS

Blind Base Cabinet,1 Door & No Drawer

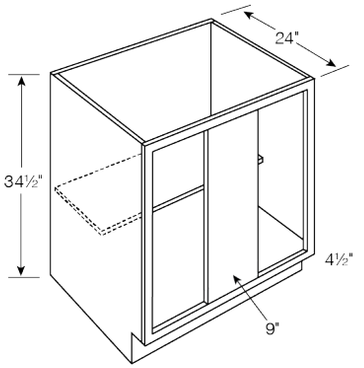

	1	2	3	4	5
BB36 (No Drawer)	650	680	709	739	768
BB42FHD (No Drawer)	714	746	779	811	844
BB48FHD (No Drawer)	793	829	865	901	937

- Specify on Order Which Side Receives Door
- Shown: Blind Left with Door on Right

Blind Base Cabinet,1 Door & 1 Drawer

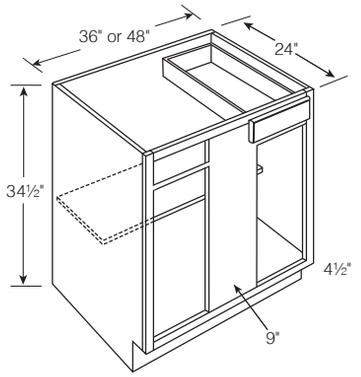

	1	2	3	4	5
BB42	872	912	952	991	1,031
BB48	966	1,010	1,054	1,098	1,141

- Specify on Order Which Side Receives Drawer and Door
- Shown: Blind Left with Door and Drawer on Right

Blind Base Cabinet Installation Recommendations

By Width

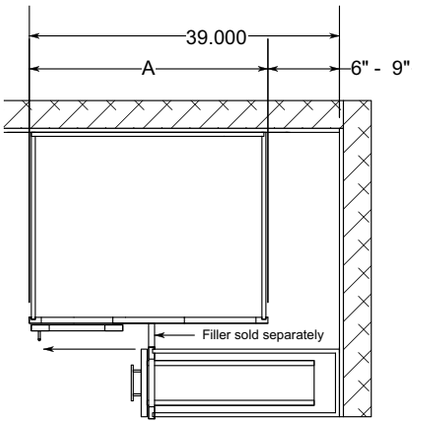

BB36 Right installation shown

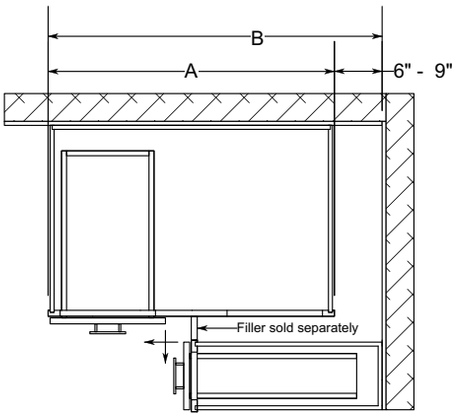

BB42 & BB48 Right installation shown

Cabinet SKU	Actual Cabinet Width (A)	Recommeded Install Spacing from Wall (B)	Door opening width (C)
BB36	30"	39" - 42"	9"
BB42	36"	42" - 45"	12"
BB48	48"	48" - 52"	18"

ORDER FILLER SEPARATELY
**FULL-HEIGHT DOOR, NO DRAWER (BB36 ONLY)
9" CENTER STILE

SPECIALTY BASE CABINETS

Base Microwave Drawer Cabinets, 24" & 27" Wide

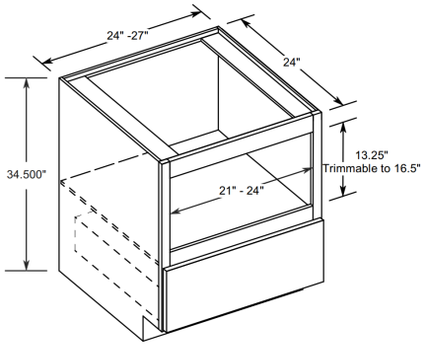

	1	2	3	4	5
BMD24	757	791	826	860	894
BMD27	784	820	856	891	927

- Drawer Head Height: 11"
- Drawer Box Height: 6" (Inside Depth 5¼")
- Finished Interior Not Included
- Not Available in Hampton

Base Microwave Cabinet w/ Overlay, 30" Wide

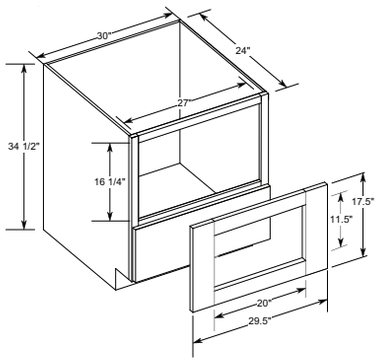

	1	2	3	4	5
BM30	949	992	1,036	1,079	1,122

- 27" Wide Opening
- Drawer Head Height: 11"
- Drawer Box Inside Depth 5¼"
- Trimmable Overlay Panel Not Included; Available to Order Separately If Needed
- Finished Interior Not Included

Drawer Base Cabinet, 2 Drawers

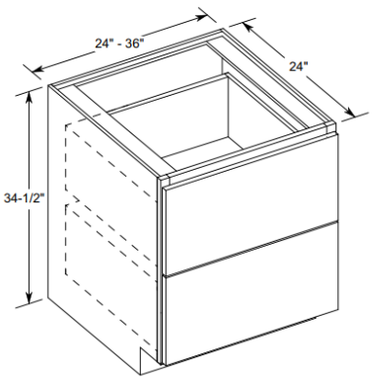

	1	2	3	4	5
DB24-2	1,147	1,199	1,252	1,304	1,356
DB30-2	1,230	1,286	1,342	1,398	1,453
DB36-2	1,274	1,332	1,390	1,448	1,505

- Top Drawer Front Height: 14"
- Bottom Drawer Front Height: 14¼"
- Both Drawers will come standard with 6" tall Drawer Box and Heavy Duty Glides.
- Optional Upgrade to 10½" Tall Drawer Box for $435 (list price)
- Not available in Hampton
- Depth of this cabinet cannot be modified

SPECIALTY BASE CABINETS

Drawer Base Cabinet, 3 Drawers

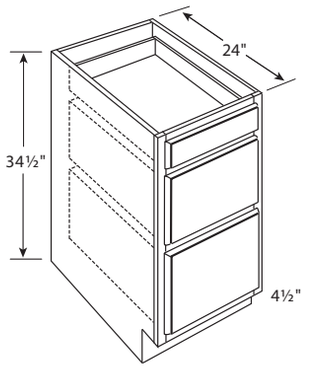

	1	2	3	4	5
DB12-3	851	890	929	968	1,006
DB15-3	889	929	970	1,010	1,050
DB18-3	916	958	1,000	1,041	1,083
DB21-3	1,008	1,053	1,099	1,145	1,191
DB24-3	1,090	1,140	1,189	1,239	1,288
DB27-3*	1,154	1,206	1,259	1,311	1,364
DB30-3	1,200	1,255	1,309	1,364	1,418
DB33-3*	1,260	1,318	1,375	1,432	1,490
DB36-3	1,309	1,369	1,428	1,488	1,547

- Single Top Drawer on All Sizes
- Top Drawer Box Height: 4", Inside Drawer Depth 3¼"
- Bottom Drawer Box Height: 6", Inside Drawer Depth 5¼"
- Slab Door Styles Will Have All 3 Slab Drawers

* Not Available in Hampton

Drawer Base Cabinet, 4 Drawers

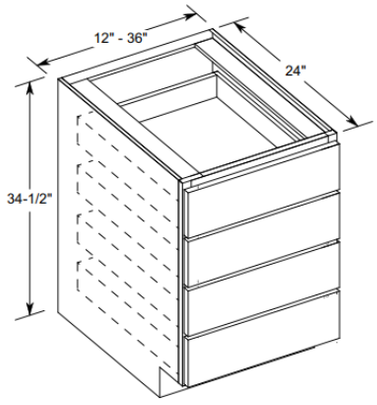

	1	2	3	4	5
DB12-4	1,044	1,091	1,139	1,186	1,234
DB15-4	1,099	1,149	1,199	1,249	1,299
DB18-4	1,154	1,206	1,259	1,311	1,364
DB21-4	1,230	1,286	1,342	1,398	1,453
DB24-4	1,283	1,341	1,399	1,458	1,516
DB30-4	1,374	1,436	1,499	1,561	1,624
DB36-4	1,466	1,533	1,600	1,666	1,733

- Top 3 Drawer Fronts are Standard Height: 6¾"
- 4th Drawer Front Height: 7"
- All Drawers will have standard 4" Tall Drawer Box
- Not available in Hampton

SPECIALTY BASE CABINETS

Transitional Angled Base Cabinet w/ Full Height Door

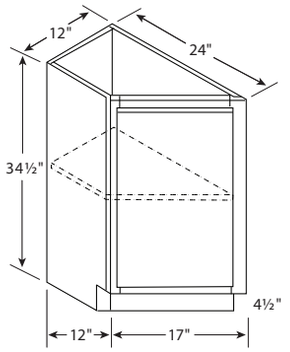

	1	2	3	4	5
TAB12FHDL	541	566	590	615	640
TAB12FHDR	541	566	590	615	640

- TAB 12FHDL (pictured)
- Hinges on Small side
- Finished Exterior is Standard
- Modification Not Available: Add Toe Kick to Right, Left or Both

Window Seat Base Cabinet

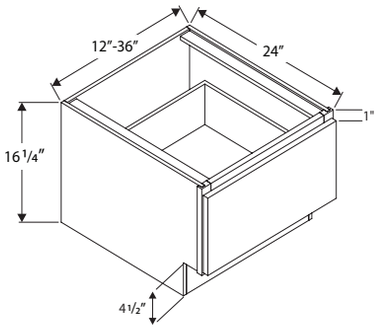

	1	2	3	4	5
BWS12	393	410	428	446	464
BWS15	412	430	449	468	486
BWS18	443	463	483	504	524
BWS21	456	477	498	519	539
BWS24	473	494	515	537	558
BWS30	503	525	548	571	594
BWS36	539	563	587	612	636

- Extended lead times for this SKU

File Drawer

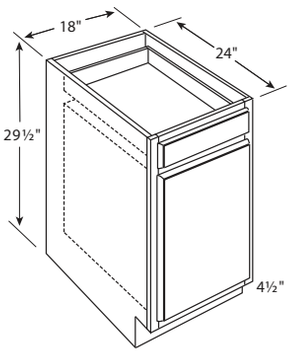

	1	2	3	4	5
DDB18	745	779	812	846	880

- Standard Top Drawer on Full Overlay Stiles 6¾" High, the Sides are 4" High
- Large Bottom Drawer Head on Full Overlay Stiles 16½" High, the Sides are 11⅜" High

SPECIALTY BASE CABINETS

Vanity Lap Drawer

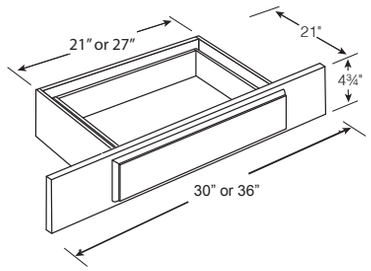

	1	2	3	4	5
KD30	426	445	464	484	503
KD36	518	542	565	589	612

- Drawer Head is Slab with Edge Profile
- Trimmable 3" Stile Each Side of Drawer
- Each Drawer can be Trimmed up to 6"

Base End Panel Door (Loose Decorative Door)

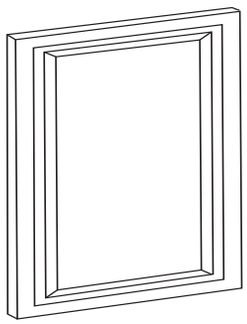

	1	2	3	4	5
BEP2430-1 (24"x 30")	228	239	249	259	270

- BEPs Match Door
- Reveals - ½" Less Width and 1¼" Less Height
- Cabinet Side that is Receiving BEP must be Finished or Purchase Skin Separately if Installing in the Field

Base End Panel Kit

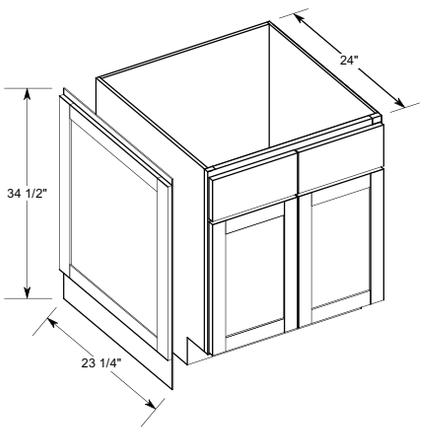

	1	2	3	4	5
BEK2430-1UNIVERSAL	201	210	219	228	237

- Not Installed
- Kits Include BEP and Finished Skin
- Cabinet purchased separately

VANITY BASE CABINETS

Vanity Base Cabinet

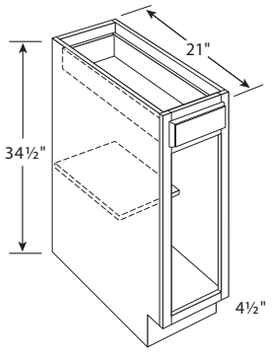

	1	2	3	4	5
VB12	641	670	700	729	758
VB15	705	737	769	801	833
VB18	733	766	799	833	866

- 21″ Deep
- One Shelf

Vanity Drawer Base Cabinet

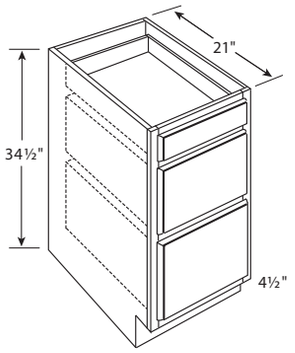

	1	2	3	4	5
VDB12	796	833	869	905	941
VDB15	824	861	899	936	974
VDB18	867	906	946	985	1,024
VDB21	916	958	1,000	1,041	1,083
VDB24	999	1,044	1,090	1,135	1,180

- 21″ Deep
- Slab Door Styles Will Have All 3 Slab Drawers

Vanity Sink Base Cabinet, 2 Left Drawers & 1 Door

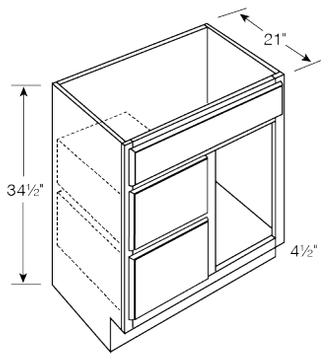

	1	2	3	4	5
VSDL30-1	906	948	989	1,030	1,071
VSDL36-1	993	1,038	1,084	1,129	1,174

- 21″ Deep
- One False Drawer Heads
- Slab Door Styles Will Have All 3 Slab Drawers

Vanity Sink Base Cabinet, 2 Left Drawers & 1 Door

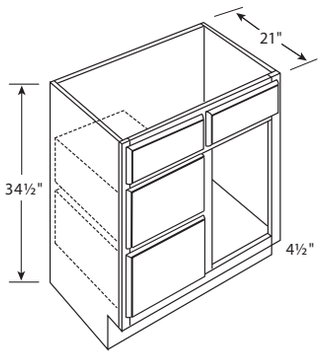

	1	2	3	4	5
VSDL30	911	952	994	1,035	1,076
VSDL36	1,008	1,053	1,099	1,145	1,191

- 21″ Deep
- Two False Drawer Heads
- Slab Door Styles Will Have All 4 Slab Drawers

VANITY BASE CABINETS

Vanity Sink Base Cabinet, 2 Right Drawers & 1 Door

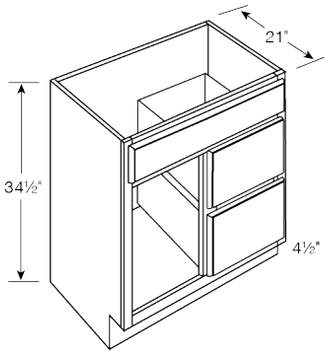

	1	2	3	4	5
VSDR30-1	906	948	989	1,030	1,071
VSDR36-1	993	1,038	1,084	1,129	1,174

- 21" Deep
- One False Drawer Heads
- Slab Door Styles Will Have All 3 Slab Drawers

Vanity Sink Base Cabinet, 2 Right Drawers & 1 Door

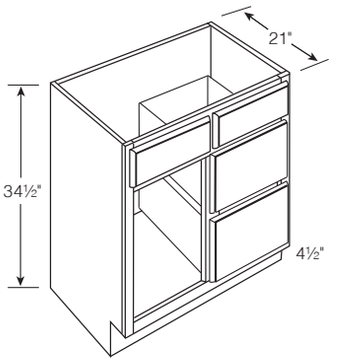

	1	2	3	4	5
VSDR30	911	952	994	1,035	1,076
VSDR36	1,008	1,053	1,099	1,145	1,191

- 21" Deep
- Two False Drawer Heads
- Slab Door Styles Will Have All 4 Slab Drawers

Vanity Sink Base Cabinet, 2 Doors

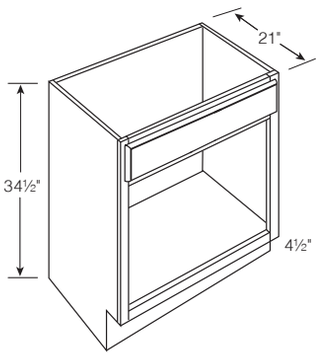

	1	2	3	4	5
V24	669	699	730	760	790
V27	714	746	779	811	844
V30-1	751	785	820	854	888
V33-1	756	790	824	859	893
V36-1	789	825	860	896	932

- 21" Deep
- One False Drawer Head

Vanity Sink Base Cabinet, 2 Doors

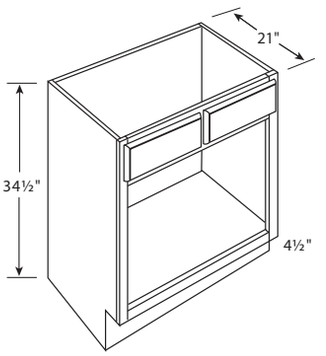

	1	2	3	4	5
V30	769	804	839	874	909
V33	784	820	856	891	927
V36	800	836	872	909	945
V42**	879	919	959	999	1,039

- 21" Deep
- Two False Drawer Heads

** Will Have Center Stile

VANITY BASE CABINETS

Vanity Sink Base Cabinet, 2 Drawers & 2 Doors

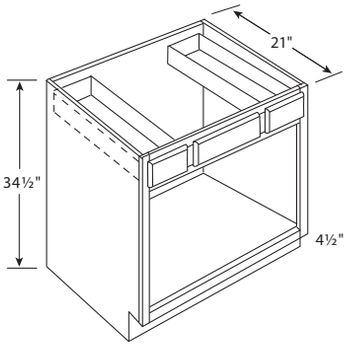

	1	2	3	4	5
VSB36 *	1,008	1,053	1,099	1,145	1,191
VSB42 **	1,046	1,094	1,141	1,189	1,236
VSB48 **	1,181	1,235	1,289	1,343	1,396

- 21″ Deep
- VSB36 has 10″ Wide Drawer Fronts
- VSB42 has 11½″ Wide Drawer Fronts
- VSB48 has 11½″ Wide Drawer Fronts

* Under-mount Drawer Glides

** Will Have Center Stile

Vanity Sink Base Cabinet, 2 Drawers & 4 Doors

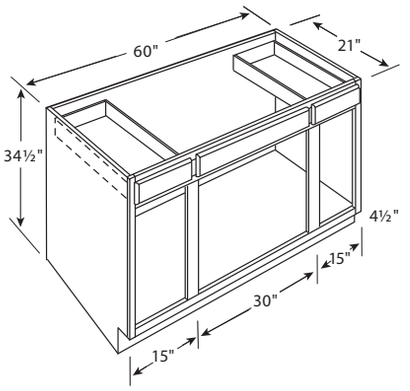

	1	2	3	4	5
VSB60	1,224	1,280	1,336	1,391	1,447

- 21″ Deep

Double Vanity Sink Base Cabinet, 4 Drawers & 2 Doors

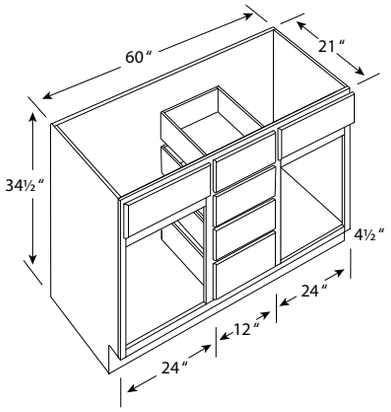

	1	2	3	4	5
VDB60	1,741	1,820	1,900	1,979	2,058

- 21″ Deep
- Slab Door Styles Will Have All 6 Slab Drawers

TALL CABINETS

15", 18" & 21" Wide Utility Cabinet, 1 Door

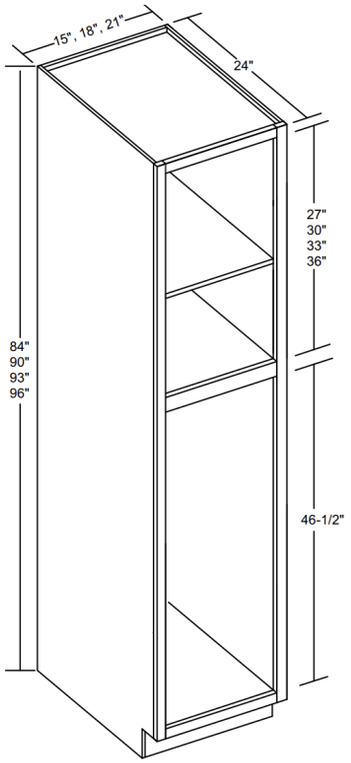

	1	2	3	4	5
P1584*	1,071	1,120	1,169	1,218	1,266
P1590*	1,157	1,209	1,262	1,315	1,367
P1593*	1,203	1,258	1,313	1,367	1,422
P1596*	1,251	1,308	1,365	1,422	1,479
P1884	1,157	1,210	1,262	1,315	1,368
P1890	1,192	1,247	1,301	1,355	1,409
P1893*	1,222	1,278	1,333	1,389	1,444
P1896	1,278	1,336	1,394	1,453	1,511
P2184*	1,252	1,309	1,366	1,423	1,479
P2190*	1,278	1,336	1,394	1,453	1,511
P2193*	1,307	1,366	1,426	1,485	1,544
P2196*	1,379	1,442	1,505	1,568	1,630

- Single Door on Top & Bottom
- 84", 90" & 93" High Cabinets have 4 Adjustable Shelves and 1 Divider Shelf
- 96" High Cabinets have 5 Adjustable Shelves and 1 Divider Shelf
- End Panels are Full Height

* Not available in Hampton

24" & 30" Wide Utility Cabinet, 2 Doors

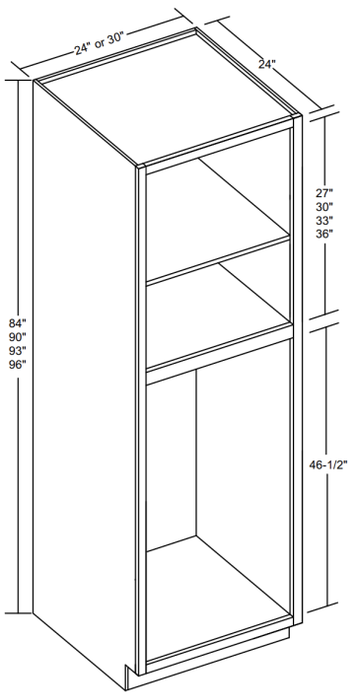

	1	2	3	4	5
P2484	1,454	1,520	1,586	1,653	1,719
P2490	1,506	1,574	1,643	1,711	1,780
P2493*	1,544	1,615	1,685	1,755	1,825
P2496	1,619	1,693	1,766	1,840	1,914
P3084*	1,643	1,718	1,793	1,868	1,942
P3090*	1,689	1,765	1,842	1,919	1,996
P3093*	1,729	1,808	1,886	1,965	2,044
P3096*	1,811	1,893	1,975	2,058	2,140

- Butt Doors on Top & Bottom
- 84", 90" & 93" High Cabinets have 4 Adjustable Shelves and 1 Divider Shelf
- 96" High Cabinets have 5 Adjustable Shelves and 1 Divider Shelf
- End Panels are Full Height

* Not available in Hampton

TALL CABINETS

Double Oven Cabinet, 1 Drawer

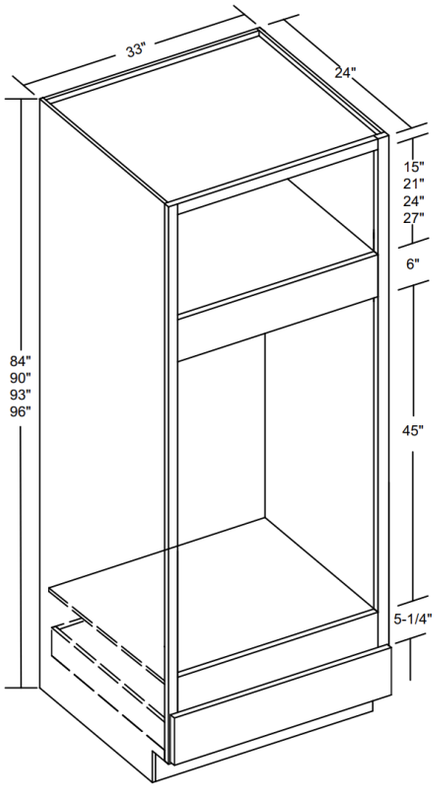

	1	2	3	4	5
OC3384D (w/ol)	1,502	1,570	1,638	1,706	1,775
OC3390D (w/ol)	1,862	1,946	2,031	2,116	2,200
OC3393D (w/ol)	2,085	2,180	2,275	2,369	2,464
OC3396D (w/ol)	2,335	2,441	2,548	2,654	2,760

- End Panels are Full Height
- Opening is 30" W x 45" H (All Three Sizes)
- Overlay (See Below) Can Be Ordered Separately, If Required

Oven Cabinet Overlay Panel Detail
OL-OVENCAB

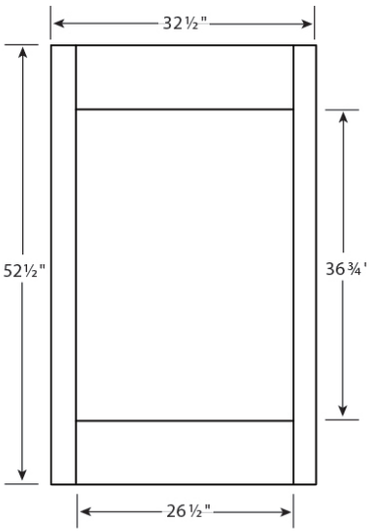

- Outside Edge is Profiled
- Ships with Oven Cabinets Noted "W/OL" (See Above)
- Opening is 26½" W x 36¾" H

TALL CABINETS

Bookcases 48", 54", 60", & 66" x 18", 24", 30", 36" Wide

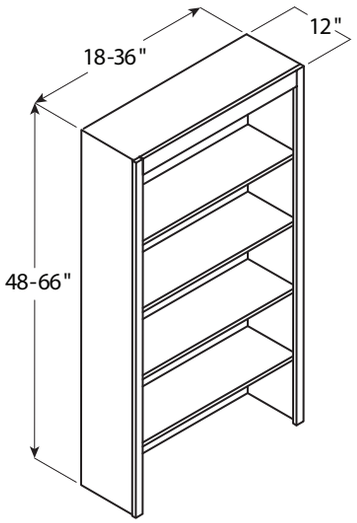

	1	2	3	4	5
BU1848S	726	759	792	825	858
BU1854S	817	854	892	929	966
BU1860S	908	949	990	1,031	1,073
BU1866S	999	1,044	1,090	1,135	1,180
BU2448S	970	1,014	1,058	1,103	1,147
BU2454S	1,089	1,139	1,188	1,238	1,287
BU2460S	1,210	1,265	1,320	1,375	1,430
BU2466S	1,331	1,392	1,452	1,513	1,573
BU3048S	1,210	1,265	1,320	1,375	1,430
BU3054S	1,363	1,425	1,487	1,549	1,611
BU3060S	1,513	1,581	1,650	1,719	1,788
BU3066S	1,664	1,740	1,816	1,891	1,967
BU3648S	1,452	1,518	1,584	1,650	1,716
BU3654S	1,634	1,708	1,782	1,856	1,931
BU3660S	1,815	1,898	1,980	2,063	2,145
BU3666S	1,997	2,087	2,178	2,269	2,360

- Bookcases are Offered Through the Modification Program and Can Extend Lead Time
- Finished Interior is Standard
- Custom Widths between 18" - 36" are Available, For Pricing Use Next Size Up
- Increased Depths Available in 1" increments, 18" depth maximum

TALL CABINETS

Bookcases 84", 90", & 96" x 18", 24", 30", 36" Wide

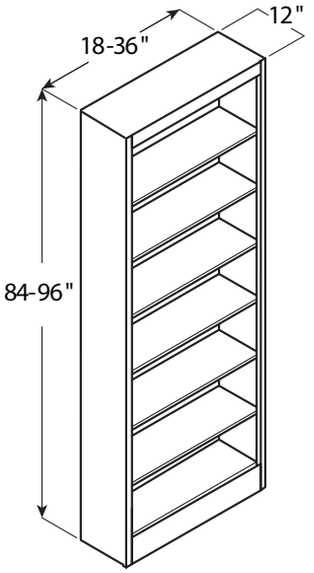

	1	2	3	4	5
BU1884S	1,271	1,328	1,386	1,444	1,502
BU1890S	1,363	1,425	1,487	1,549	1,611
BU1896S	1,452	1,518	1,584	1,650	1,716
BU2484S	1,694	1,771	1,848	1,925	2,002
BU2490S	1,815	1,898	1,980	2,063	2,145
BU2496S	1,936	2,024	2,112	2,200	2,288
BU3084S	2,118	2,214	2,310	2,406	2,503
BU3090S	2,269	2,372	2,476	2,579	2,682
BU3096S	2,420	2,530	2,640	2,750	2,860
BU3684S	2,540	2,655	2,771	2,886	3,002
BU3690S	2,723	2,846	2,970	3,094	3,218
BU3696S	2,904	3,036	3,168	3,300	3,432

- Bookcases are Offered Through the Modification Program and Can Extend Lead Time
- Finished Interior is Standard
- Custom Widths between 18" - 36" are Available, For Pricing Use Next Size Up
- Increased Depths Available in 1" increments, 18" depth maximum

MOULDINGS & ACCENTS

5/8" Scribe Moulding

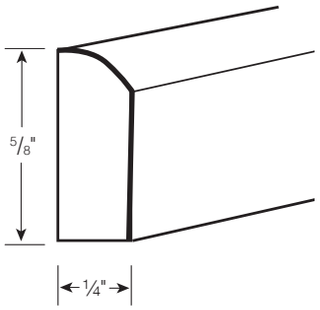

	Stains	Paints
SM8	77	81

- 94" Long

Light Rail Moulding

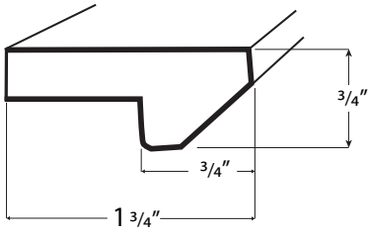

	Stains	Paints
LR8	94	99

- 94" Long

Outside Corner Moulding

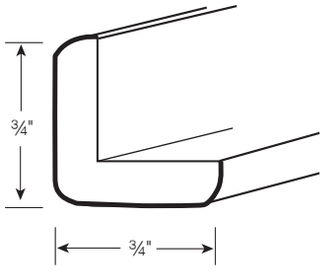

	Stains	Paints
OCM8	76	80

- 94" Long

Batten Moulding

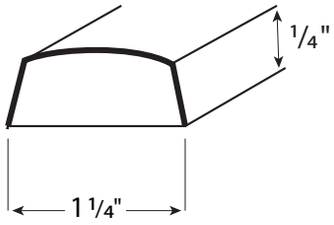

	Stains	Paints
BATTEN	94	99

- 94" Long

Bold line on drawings indicates finished sides

MOULDINGS & ACCENTS

135 Outside Corner Moulding

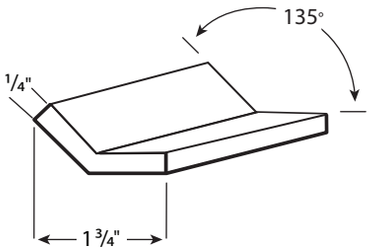

	Stains	Paints
OCM135-8	90	95

- 94″ Long

Shoe Moulding

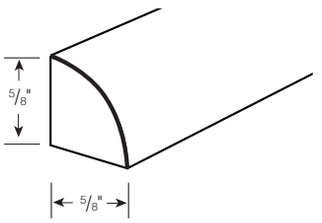

	Stains	Paints
SHOEMLD	80	84

- 94″ Long

Small Cove Moulding

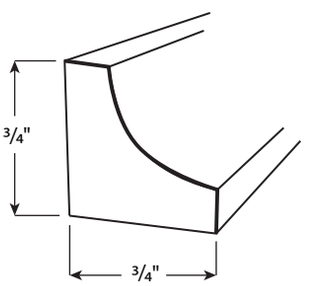

	Stains	Paints
COVE	82	86

- 94″ Long

Base Moulding

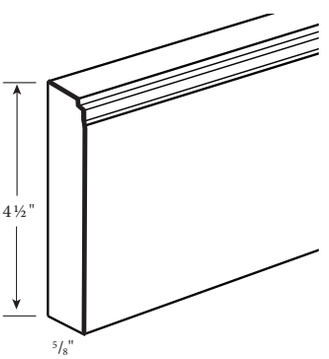

	Stains	Paints
BASEMLD	228	239

- 94″ Long

Bold line on drawings indicates finished sides

MOULDINGS & ACCENTS

2 ¾" Crown Moulding

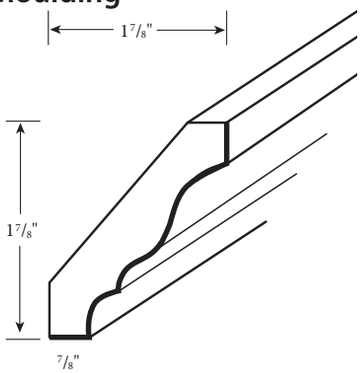

	Stains	Paints
CM8	156	164

- 94" Long

4⅛" Large Crown Moulding

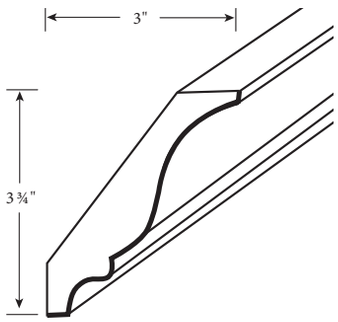

	Stains	Paints
BCM8	175	184

- 94" Long

3⅝" Large Cove Moulding

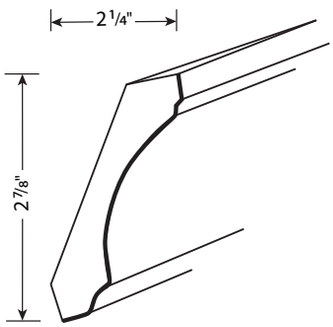

	Stains	Paints
CROWNCOVE	180	189

- 94" Long

3½" Shaker Crown Moulding

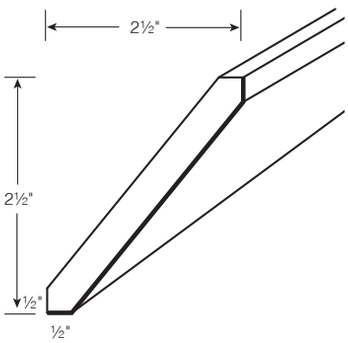

	Stains	Paints
SHAKERCROWN	190	199

- 94" Long
- Check Stock Sheet for Availability

Bold line on drawings indicates finished sides

MOULDINGS & ACCENTS

Beckony Valance

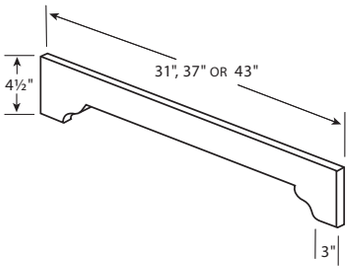

	Stains	Paints
V31D	66	69
V37D	78	82
V43D	90	95

- Discontinued, Limited Quantities

Arched Valance

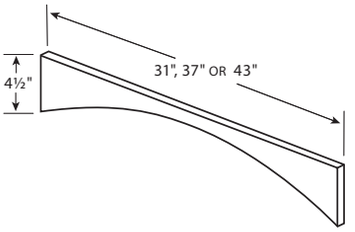

	Stains	Paints
V31E	66	69
V37E	78	82
V43E	90	95

- Discontinued, Limited Quantities

Tulip Bun Foot

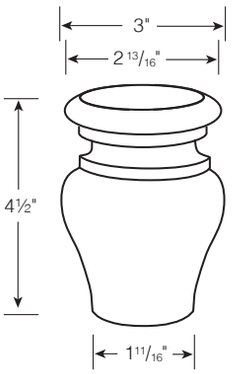

	Stains	Paints
TULIPBUNFOOT	75	79

MOULDINGS & ACCENTS

Plain Corbel

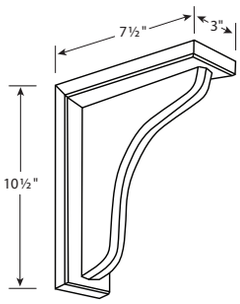

	Stains	Paints
PLCOR	86	90

- Unglazed
- Profiles May Vary Slightly from Picture

3" & 6"Fillers

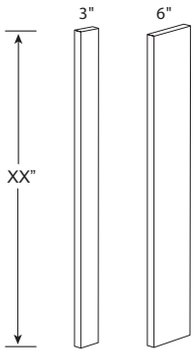

	Stains	Paints
F330	64	67
F336	74	78
F342	79	83
F396	159	167
F630	108	113
F636	117	123
F642	158	166
F696	291	306

- Standard Finish Includes One Face and Two Sides
- ¾" Thick

FILLERS & PANELS

Column Box Filler, 3" or 6" Wide

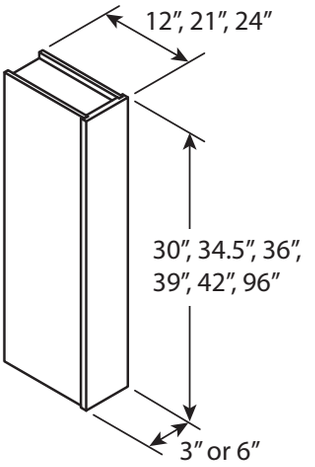

	Stains	Paints
CBF33012	399	419
CBF33412	418	439
CBF33612	436	458
CBF33912	445	467
CBF34212	454	477
CBF39612	604	634
CBF33021	406	426
CBF33421	426	448
CBF33621	445	467
CBF33921	454	477
CBF34221	463	486
CBF39621	616	647
CBF33024	411	432
CBF33424	430	452
CBF33624	448	470
CBF33924	459	482
CBF39624	622	653

	Stains	Paints
CBF63012	418	439
CBF63412	436	458
CBF63612	453	476
CBF63912	467	490
CBF64212	490	515
CBF69612	604	634
CBF63021	426	448
CBF63421	445	467
CBF63621	463	486
CBF63921	476	500
CBF64221	500	525
CBF69621	616	647
CBF63024	431	452
CBF63424	448	470
CBF63624	467	490
CBF63924	481	505
CBF64224	505	531
CBF69624	622	653

- Column Boxes are Offered Through the Modification Program and Extend Lead Time
- Finished Interior and Exterior is Standard

FILLERS & PANELS

Overlay Filler

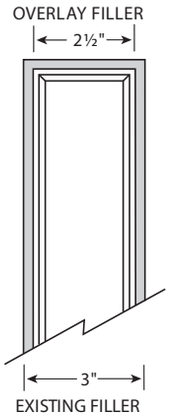

	Stains	Paints
OLF312	38	40
OLF315	40	42
OLF330	41	43
OLF336	46	48
OLF339	47	49
OLF342	49	51
OLF384	97	102
OLF393	203	213
OLF396	270	284

- Matches Door and Drawer Reveal

Base End Panel / Dishwasher Return

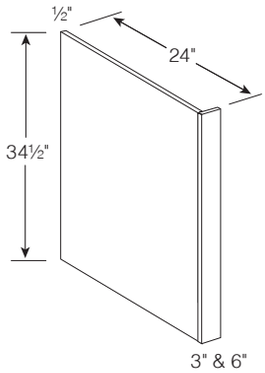

	Stains	Paints
DWR3 (Reversible)	213	224
DWR6 (Reversible)	236	248

- Front Filler Extends ¼" on Finished Side of Panel

Refrigerator End Panel Return 1.5

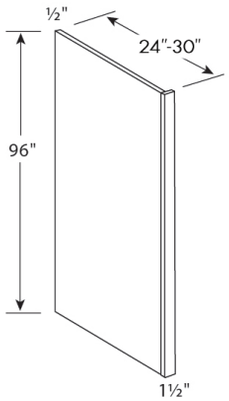

	Stains	Paints
REP1.5-24	329	345
REP1.5-30	373	392

- Front Filler Extends ¼" on Finished Side of Panel
- End Panels are Reversible

PANELS & ACCESSORIES

Refrigerator End Panels .75

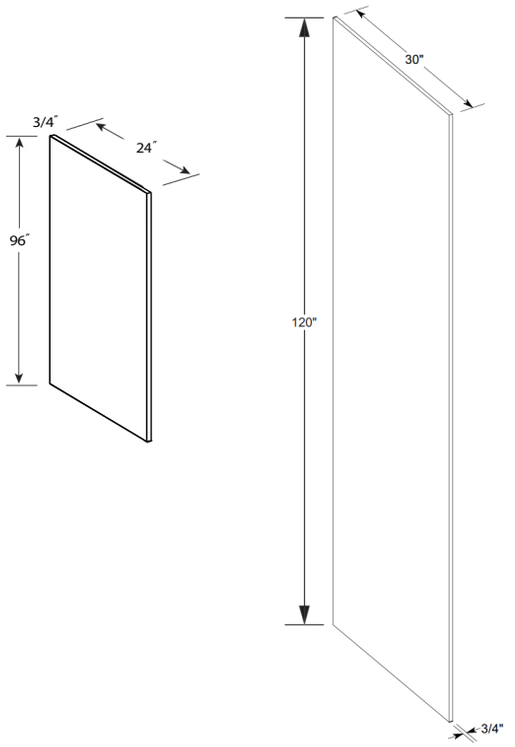

	Stains	Paints
REP.75-24	409	427
REP.75-30-120	694	729

- Edgebanded on Two, Long Edges
- Both Sides Finished
- 120" High End Panels are Only Available in Paints

Short Grain Panel 48" x 96" x ¼"

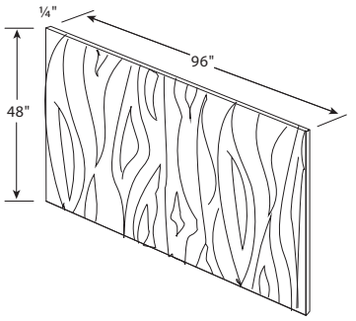

	Stains	Paints
BP9648SG	513	N/A

- For Stained Door Styles Only
- Available in Birch Only

Long Grain Panel 48" x 48" and 96" x 48" x ¼"

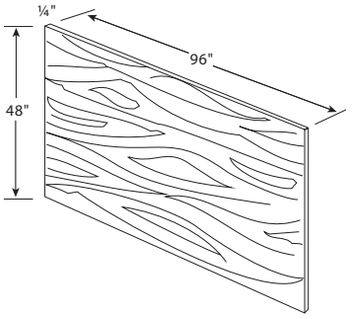

	Stains	Paints
BP4848	361	379
BP4848MDF	361	379
BP4896LG	513	539
BP4896MDF	513	539

ACCESSORIES

Toe Kick Cover

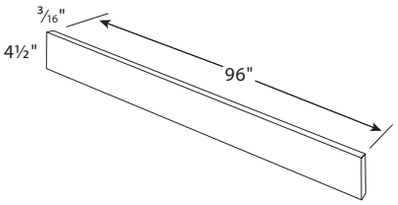

	Stains	Paints
TKS8	81	85

- 3⁄16″ x 4½″ x 94″ (Stain)
- ¼″ x 4½″ x 94″ (Paint)
- 94″ Long

Shelf Material

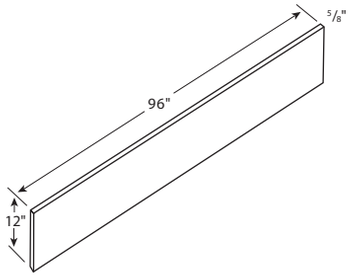

	Stains	Paints
SHELF12X96	199	209

- 12″ x 94″ x 5⁄8″
- Natural Birch Veneer or Finished to Match Door Color
- One Long Edge Banded

Skins (for Walls, Bases & Talls)

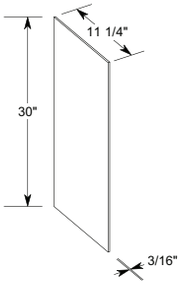

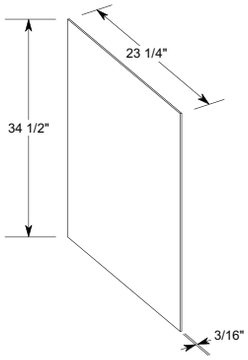

	Stains	Paints
SKINWALL2424	87	91
SKINWALL30	85	89
SKINWALL36	87	91
SKINWALL39	90	95
SKINWALL42	93	98
SKINBASE (UNIVERSAL)	92	97
SKINBASELEFT	97	102
SKINBASERIGHT	97	102
SKINTALL96	199	209
SKINTALL96LEFT	209	219
SKINTALL96RIGHT	209	219

ACCESSORIES

Floating Shelf

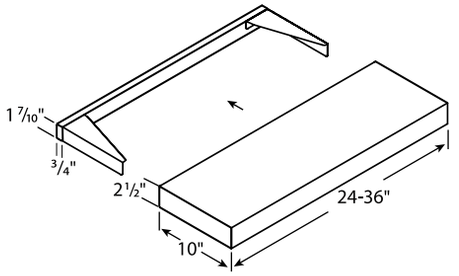

	Stains	Paints
SHELFFLOAT24	394	414
SHELFFLOAT30	413	434
SHELFFLOAT36	452	474
SHELFFLOAT42	492	517
SHELFFLOAT48	536	563
SHELFFLOAT54	585	614
SHELFFLOAT60	638	670

- Comes with Installation Bracket
- Cannot be Modified

Roll Out Tray

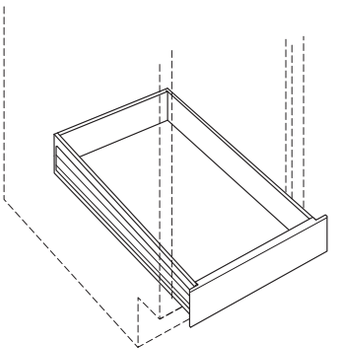

B15ROT	279
B18ROT	287
B21ROT	294
B24ROT	303
B27ROT	308
B30ROT	318
B33ROT	326
B36ROT	333

- 4" Tall, Dovetail Drawers
- Full Extensions, Soft Close Undermount Glides
- Will Fit into Tall Units
- To be used with Pilaster Kits, sold separately
- Not Installed; Tray Ships Separately From Cabinet

Pilaster Kit for Roll Out Tray

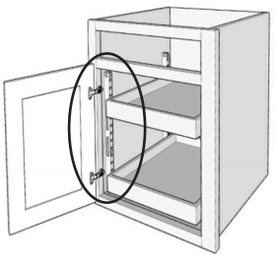

Pilaster Kit Installed
(Roll Out Trays not included)

Pilaster

Hook
Dowel

	Stains	Paints
PILASTERKIT	105	105
PILASTERKITINSTLD*	120	120

- Pilaster Kit comes with 4 Pilasters and 8 Hook Dowels
- Order 1 Kit for a Base Cabinet and 2 Kits for Pantries

*** Roll Out Tray is Sold and Ships Separately**

ACCESSORIES

Hoods

Traditional
SY-WCH-30/36/42/48

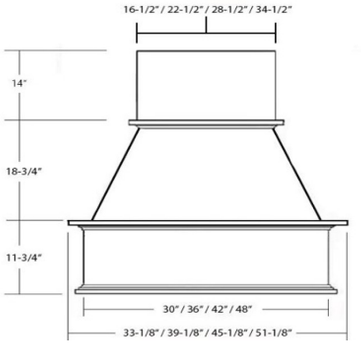

Epicurean
SY-WCVH-36/42/48

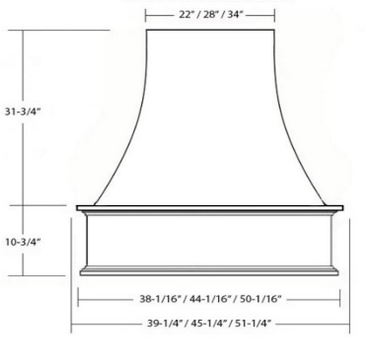

Shiplap
SY-WCSL-30/36/42/48

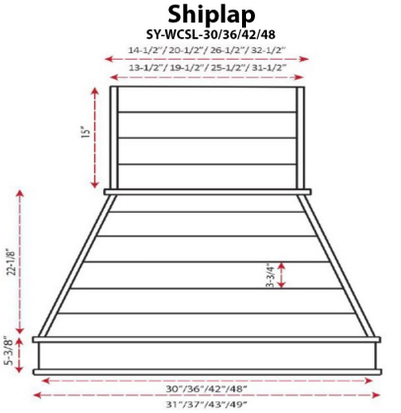

Traditional Hood (SY-WCH - 30"/36"/42"/48") - Specifications sheet located in online SpecBook
Epicurean Hood (SY-WCVH - 36"/42"/48") - Specifications sheet located in online SpecBook
Shiplap Hood (SY-WCSL - 30"/36"/42"/48") - Specifications sheet located in online SpecBook

Available in Maple (Paints and Stains) and Oak (Paints and Stains)
Original Hood Cost (blue columns 2 & 3) include: Hood, Liner, and 300 CFM Blower

Blower Options: 300CFM (standard, included), 400CFM (9% upcharge), and 600CFM (34% upcharge)
300CFM Blower - Specifications sheet located in online SpecBook
400CFM Blower - Specifications sheet located in online SpecBook
600CFM Blower - Specifications sheet located in online SpecBook

Extensions: Vertical extensions are optional and come with a trim kit. The prices are in the table below, the Traditional and Epicurean Hoods have vertical extension options of 14", 24", and 36". The Shiplap Hoods have vertical extension options of 15", 26 1/4", and 37 1/2".

****** PLEASE NOTE: Orders with hoods will extend lead times to 5-6 weeks.******

Hood SKU	Stain	Paint	Extension 14" - 15" Stain	Extension 24" - 27" Stain	Extension 36" - 38" Stain	Extension 14" - 15" Paint	Extension 24" - 27" Paint	Extension 36" - 38" Paint
SY-WCH-30	$4,518	$4,744	460	629	798	483	660	838
SY-WCH-36	$4,851	$5,094	500	699	898	525	734	943
SY-WCH-42	$5,252	$5,515	546	780	1,014	573	819	1,065
SY-WCH-48	$5,577	$5,856	598	873	1,131	628	917	1,188
SY-WCSL-30	$4,629	$4,860	435	579	723	457	608	759
SY-WCSL-36	$5,124	$5,380	471	640	810	495	672	851
SY-WCSL-42	$5,688	$5,972	511	711	911	537	747	957
SY-WCSL-48	$6,190	$6,500	557	792	1,027	585	832	1,078
SY-WCVH-36	$6,420	$6,741	500	699	898	525	734	943
SY-WCVH-42	$6,646	$6,978	546	780	1,014	573	819	1,065
SY-WCVH-48	$6,809	$7,149	598	873	1,148	628	917	1,205

ACCESSORIES - INSTALLED

Rev-A-Shelf Accessories

Image	Lazy Susans	Description	Installs with	List Price
	LD-4BW-001-18SB-8	18″ lazy daisy banded wood full circle (cost per tray)	all CW24 cabinets	290
	LD-4BW-201-20SBS-8	20″ lazy daisy banded wood D-shape (cost per tray)	all CW27 cabinets	300
	LD-4BW-401-28SBS-40	28″ lazy daisy banded wood kidney swivel mount (cost per tray)	ER36, ER33	369
	3072-18-11-52	18″ full circle white polymer 2 tray set	CW2430	240
	3073-18-11-531	18″ full circle white polymer 3 tray set w/31″ lower shaft	CW2436	319
	3073-18-11-536	18″ full circle white polymer 3 tray set w/36″ lower shaft	CW2442	341
	3073-20-11-531	20″ full circle white polymer 3 tray set w/31″ lower shaft	CW2736	350

ACCESSORIES - INSTALLED

Image	Lazy Susans (continued)	Description	Installs with	List Price
	3073-20-11-536	20″ full circle white polymer 3 tray set w/36″ lower shaft	CW2742	371
	LD-2472-28-11-1	28″ lazy daisy white polymer kidney 2 tray set	ER36, ER33	283

Image	Tilt-Out Trays	Description	Installs with	List Price
	LD-6572-11-11-1	11″ deluxe white tilt-out trays (pair) w/45° hinges	SB33	79
	LD-6572-14-11-1	14″ deluxe white tilt-out trays (pair) w/45° hinges	SB36	84

Image	Utensil Organizers	Description	Installs with	List Price
	4WUT-1SH	utensil organizer insert 18.5″ x 22″	B18, B21, B24	198
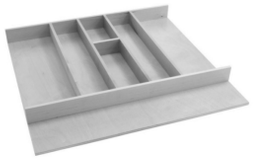	**4WUT-3SH**	utensil organizer insert 24″ x 22″	B18, B21, B24, B27	260

ACCESSORIES - INSTALLED

Image	Cutlery Trays	Description	Installs with	List Price
	4WCT-1SH	wood cutlery tray for 12″-18″ cabinet	B12, B15, B18, B33, B36, DB12, DB15, DB18	185
	4WCT-3SH	wood cutlery tray for 21″-24″ cabinet	B21, B24, B27, B39, B42, DB24	241
	4WUTKB-36SH-1	trimmable wood knife block insert for 36″ cabinet	DB30, DB36, B30-1, B33-1, B36-1	640

Image	Spice Organizers	Description	Installs with	List Price
	4SDI-18	trimmable spice organizer insert 16″ x 19″	B15, B18, B21	227
	4SDI-24	trimmable spice organizer insert 22″ x 19″	B21, B24, B27	309

ACCESSORIES - INSTALLED

Image	Waste Containers	Description	Installs with	List Price
	4VLWCSC-1535DM-1	bottom mount waste container - single	B15	734
	4VLWCSC-1835DM-2	bottom mount waste container - double	B18	741

Image	Base Organizers	Description	Installs with	List Price
	448-BCSC-5C	5" base organizer pull-out with adjustable shelves	B9	1,119
	447-BCSC-5C	5" base organizer pull-out with tray divider, soft close	B9	1,140
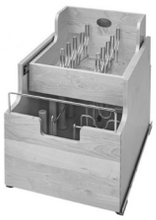	**4CW2-18SC-1**	wood cookware organizer, soft close	B18	1,679
	4FSCO18SCS-1	food storage container organizer, soft close	B18	1,395

Please Note: All wall and base pull-outs have ball bearing slides (not soft-close) unless otherwise noted.

ACCESSORIES - INSTALLED

Image	Base Organizers	Description	Installs with	List Price
	448UT-BCSC-8C	base organizer with utensil bins, soft close	B12FHD	1,479
	53PSP-18SC-MP	2-tier solid blind base pullout; soft close (maple)	BB48FHD	2,877
	RAS-ML-HDCR	mixer lift with solid wood shelf	B15FHD, B18FHD, B21FHD	625

Please Note: All wall and base pull-outs have ball bearing slides (not soft-close) unless otherwise noted.

ACCESSORIES - NOT INSTALLED

Image	Base Drip Tray	Description	Installs with	List Price
	SBDT-3336-A-1	sink base drip tray 33/36 almond *(will need to be cut down to fit the SB33)*	SB33, SB36	187
	SBDTF-2730-14-1	flexible sink drip tray 27/30 gray *(will need to be cut down to fit the SB27)*	SB27, SB30	171
	SBDTF-3336-14-1	flexible sink drip tray 33/36 gray *(will need to be cut down to fit the SB33)*	SB33, SB36	199

Image	Wall Filler Pull-Outs	Description	Installs with	List Price
	432-WF-3C-RR	3" wall filler pull-out w/shims 30" tall *(filler not included)*	all 3" wall fillers	502
	432-WF36-3C-RR	3" wall filler pull-out w/shims 36" tall *(filler not included)*	all 3" wall fillers	553
	432-WF42-3C-RR	3" wall filler pull-out w/shims 42" tall *(filler not included)*	all 3" wall fillers	572

Please Note: All wall and base pull-outs have ball bearing slides (not soft-close) unless otherwise noted.

ACCESSORIES - NOT INSTALLED

Image	Wall Filler Pull-Outs	Description	Installs with	List Price
	432-WF-6C-RR	6" wall filler pull-out w/shims 30" tall *(filler not included)*	all 6" wall fillers	609
	432-WF-36-6C-RR	6" wall filler pull-out w/shims 36" tall *(filler not included)*	all 6" wall fillers	655
	432-WF42-6C-RR	6" wall filler pull-out w/shims 42" tall *(filler not included)*	all 6" wall fillers	632

Image	Base Filler Pull-Outs	Description	Installs with	List Price
	432-BF-3C-RR	3" base filler pull-out w/shims 30" tall *(filler not included)*	all 3" base fillers	615
	432-BF-6C-RR	6" base filler pull-out w/shims 30" tall *(filler not included)*	all 6" base fillers	845

Please Note: All wall and base pull-outs have ball bearing slides (not soft-close) unless otherwise noted.

ACCESSORIES - NOT INSTALLED

Image	Base Organizers	Description	Installs with	List Price
	4WDIV-24-1	wood deep drawer divider insert, 24″ wide	DB24-2 with upgraded 10.5″ tall drawer box	341
	4WDIV-30-1	wood deep drawer divider insert, 30″ wide	DB30-2 with upgraded 10.5″ tall drawer box	393
	4WDIV-36-1	wood deep drawer divider insert, 36″ wide	DB36-2 with upgraded 10.5″ tall drawer box	457
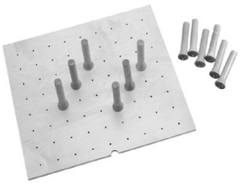	**4DPS-2421**	drawer peg system	DB24-2 with upgraded 10.5″ tall drawer box	261
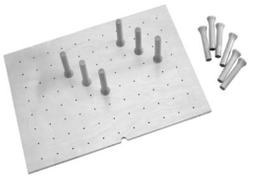	**4DPS-3021**	drawer peg system	DB30-2 with upgraded 10.5″ tall drawer box	313
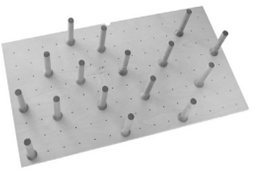	**4DPS-3921**	drawer peg system	DB36-2 with upgraded 10.5″ tall drawer box	383
	4DPS-PEG-4	pack of 4 extra pegs	drawer peg system	22

ACCESSORIES - NOT INSTALLED

Image	Base Organizers	Description	Installs with	List Price
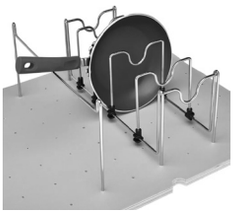	**5DCD-1-CR**	drop-in pan organizer	drawer peg system	105
	5DCH-2-1-CR	drop-in canister holder with 2 canisters	drawer peg system	130
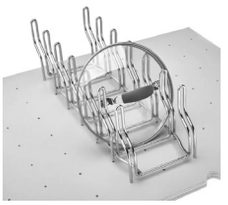	**5DLD-1-CR**	drop-in lid organizer	drawer peg system	91

Image	Chrome Tray Dividers	Description	Installs with	List Price
	LD-597-12CR-10	12″ chrome tray divider	universal in all base cabinets, W361824, W362424	53
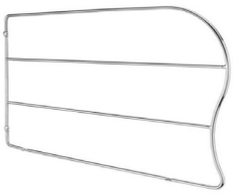	**LD-597-18CR-10**	18″ chrome tray divider	universal in all base cabinets, W362424	56

REPAIR ITEMS

Image	Repair Items	Description	List Price
	TOUCHUPKITXX	Touch-Up Kit includes: (1) Fil-Stik which is a semi-hard putty in stick form and (1) color match marker (available in all paint colors and stains, except Natural)	53
	BLENDER-SPRAY	Blender spray is designed for blending spray lines, blending overspray and blending minor surface scratches on C.A.B. lacquer finishes.	43
	TOPCOAT - SPRAY	Top Coat is a 25 sheen acrylic clear coat and is applied over Spray Paint repairs.	47
	SPRAYPAINTXX	Spray Paint is applied over Hard Fill repairs to create a seamless finish. (available in all paint colors)	83
	HARD-FILL-STICKXX	Hard Fill Sticks require a Burn-In Knife (sold separately) to melt the product and fill defects, dents, scratches and nicks in cabinetry. (available in all paint colors)	60
	BURNINKNIFE	Burn-In Knife is used to heat and melt the Hard Fill Stick onto the repair site of the cabinetry.	130

REPAIR ITEMS

Image	Repair Items (cont.)	Description	List Price
	HARDFILLTOOL	Hard Fill Tool is designed to level the Hard Fill product on the repair area of the cabinetry.	67
	REPAIRKIT	Repair Kit includes: (1) Burn-in Knife, (1) set of Hard Fill Sticks in all seven paint colors, (1) Hard Fill Tool, and sandpaper	750
	CABINETARMOR	32" x 60' roll of Cabinet Armor with adhesive edge used to protect cabinets after installation	190

SALES AIDS

Image	Sales Aids	Description	List Price
	STARTERKIT	**Starter Kit** includes: (10) Sample Doors (1) Sample Color Chip Box w/ current colors and stains in a Dovetail Drawer Box and (1) Moulding Kit in EuroBox	806
	SELECTIONCENTER-FULL	**Selection Center** includes: Display as shown, 57" wide x 89" high x 26" deep Metal Hanging System for 30 Sample Doors, (20) Sample Doors, (1) Sample Color Chip Box with current paints and stains in Dovetail Drawer Box, (1) Moulding Kit in EuroBox123 Sample Drawer Box.	4,078
	SAMPLEDOOR	(1) **Sample Door** Dealer may select Door style and color/stain	47
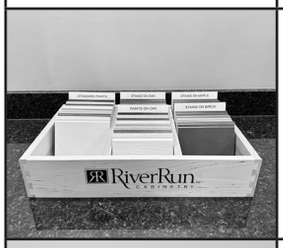	**BASEMLDSAMPLE-CHIPS**	**Base Moulding Sample Kit** includes: (1) Dovetail Drawer Box with all current paint and stain color sample chips	349
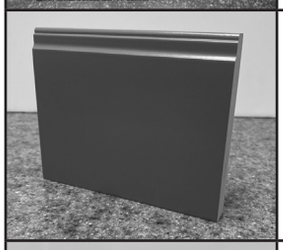	**BASEMLDSMP**	(1) **Base Moulding Sample Chip** Dealer may select wood species and color/stain	19
	MOULDINGKIT	(1) **Moulding Kit** with all current moulding offerings in 4" wide samples in Euro Sample Drawer Box.	125
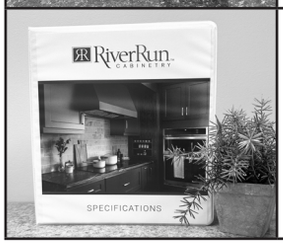	**PRODUCTBINDER**	(1) Current **Sales Binder/SpecBook**	63

SALES AIDS

Image	Sales Aids (cont.)	Description	List Price
	BROCHURERRC	16-page, full color, 11″ x 8.5″ **Brochures**, (1) pack of 15 brochures	60
	RRCDB	(1) **Door Bag**	156
	SAMPLECHIPBOX_EB	(1) **EuroBox Sample Drawer Box**	47

FINISHING PROGRAM

RiverRun Cabinetry

FINISHING PROGRAM

- Our finishing program has been created so you can order products such as turned posts, furniture feet, corbels etc. from a third party supplier, have it shipped to RiverRun Cabinetry and we will finish it to match your cabinet order and ship to you with your RiverRun Cabinetry order.

FOLLOW THESE STEPS

1. Place your cabinet order with RiverRun Cabinetry
   Once you submit your RiverRun order your order will be issued an "Order Number"
2. Purchase your items from a third party supplier that you would like RiverRun to finish. Use your River-Run Order Number as your purchase order or job name on your order with the third party supplier.
3. Have products shipped to:

   RiverRun Cabinetry
   ATTN: RiverRun Finish Program
   4660 Early Road
   Mt Crawford, VA 22841
4. Once we receive your items we will refer to your RiverRun order number and add the item into the finish production schedule with your cabinetry order.

PROGRAM REQUIREMENTS

- RiverRun Cabinetry order must consist of 5 cabinets in addition to the products requesting to be finished.
- Items sent to RiverRun Cabinetry requesting a stained finish MUST be of the same wood species as your RiverRun Cabinetry order.
- Items sent to RiverRun Cabinetry requesting a painted finish must be "Paint Grade"
- If we do not receive your products within ample time for finishing, a delivery fee will be applied such as FedEx charges or RiverRun Cycle Ship minimum charges.
- If items arrive to RiverRun requiring dismantling in order to finish, we will contact you for additional costs and your approval.

FINISH PROGRAM LIST PRICING

Island Legs, Turned Posts, Split Posts up to 5 inches wide and 42 inches long $339

Corbels, Shelf Supports up to 5 inches wide and 18 inches tall $189

Larger Items such as Wainscot Panels $762

Hoods $935

Osborne Wood Products Program

RiverRun Cabinetry will finish **paint grade Soft Maple** and **Oak (for paint)** and **Russian Birch, Maple** and **Red Oak (for stain)** items to match your RiverRun Cabinets.

Please follow instructions closely.

1. **Visit *OsborneWood.com* and add your selected items to your cart.**
2. **At Checkout, complete the "Shipping & Billing" address page as shown below:**

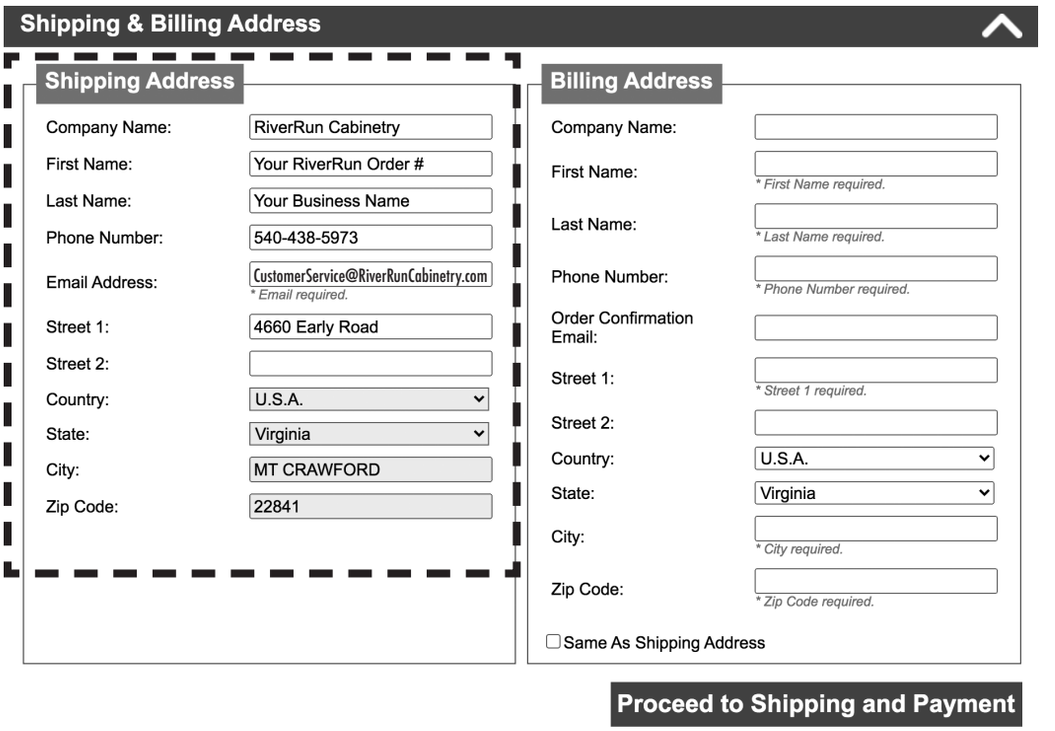

3. **We will receive your package, unpack, inspect for damage, finish the same color as your RiverRun order number indicated on your referenced order.**
4. **RiverRun will re-pack your finished products and ship them to you.**

Please Note:

- You must order and pay for the items with Osborne Wood Products.
- You must select **paint grade Soft Maple** and **Oak** (for paints) or **Russian Birch, Maple** or **Red Oak** (for stains).
- If we do not receive your products within ample time for finishing, we will charge a delivery fee to FedEx or Cycle Ship your Osborne Wood Product items to you.
- Must be accompanied with a minimum 5 cabinet order.

Costs for Finishing (List Prices):

- Island Legs, Turned Posts, Split Posts up to 5 inches wide and 42 inches long $339
- Corbels, Shelf Supports up to 5 inches wide and 18 inches tall $187
- Larger Items such as Panels $762
- Hoods $935

EMAIL REGISTRATION

Dealer Code: _____ **Select One:** ☐ New ☐ Update ☐ Cancel

Complete this form to register your email address with RiverRun Cabinetry. Once your email is registered, you will be set up to send/receive orders electronically via email.

All your order communication - submitting orders/expedites, receiving acknowledgements and making revisions - is via one order entry email address: Order@RiverRunCabinetry.com (Warranty emails should be sent to a separate email address: Damages@RiverRunCabinetry.com)

Program Details

- One registering your email with RiverRun, all order communication must be emailed in.
- One email address per designer/salesperson. Orders may be submitted only via your registered email. Acknowledgements will be returned to the same registered email address.
- Expedites and revisions must also be submitted via email to: Order@RiverRunCabinetry.com
- Warranties should be submitted via email to: Damages@RiverRunCabinetry.com
- Please keep your email address current. Use this form to inform RiverRun of an email address change or to remove an email address from our system.
- Privacy: RiverRun will on occasion use your email to communicate promotions and updates, but will never share your email with outside vendors.

DEALER NAME: _____

ADDRESS: _____

CITY, STATE, ZIP: _____

PHONE: _____

GENERAL DEALERSHIP EMAIL (promos, price updates, etc.)

EMAIL: _____

DESIGNER NAME: _____

EMAIL: _____

DESIGNER NAME: _____

EMAIL: _____

DESIGNER NAME: _____

EMAIL: _____

RiverRun™ CABINETRY

CUSTOM QUOTE FORM

Today's Date: _____

DEALER CONTACT INFO:

Email this form to **CustomerService@RiverRunCabinetry.com**

Dealer Name: _____ Contact: _____

Contact Email: _____ Contact Phone: _____

Dealer Location: _____

CABINET INFO:

Door Style: _____

Drawer Front Style: _____

Wood Specie: _____

Finish Color: _____

This section to be completed by the factory.
List Price:
Expiration Date:
Approved by:

Please provide a detailed description and dimensioned drawing of the requested product. One item per form.
***** Lead time may be extended on custom quote items. *** Please include an approved copy of this form when placing your order.**

4660 Early Rd., Mt. Crawford, VA 22841 • phone: 540.438.5973 • customerservice@riverruncabinetry.com

HOMEOWNER'S WARRANTY REGISTRATION

RiverRun Cabinetry warrants its products to the original purchaser with a five-year warranty against manufacturing defects in materials and workmanship under normal indoor use. This warranty begins on the date of delivery and remains in effect for five years. It is limited solely to the repair or replacement of the defective item, at RiverRun Cabinetry's discretion, and does not cover unfinished products.

Exclusions

- This warranty does not cover defects resulting from:
- Improper installation, handling, storage, modifications, or assembly
- Exposure to extreme conditions, abuse, or negligence
- Use of the product for any purpose other than its intended use
- Normal wear and tear

Additionally, the warranty covers only the defective parts and does not include costs associated with installation, removal, or transportation.

Natural Variations

Due to the natural aging of wood, color and grain variations may occur over time. Although RiverRun Cabinetry takes measures to minimize these effects, any changes in color or pattern due to natural aging are considered normal and are not covered under this warranty.

Design and Specification Changes

RiverRun Cabinetry reserves the right to modify designs, specifications, and materials without obligation to maintain consistency with previously manufactured products. If a warranty claim is made for a style or product that is no longer available, RiverRun Cabinetry may substitute it with a similar product. Please note that the finish of the replacement component may not exactly match the original due to natural aging.

Limitation of Liability

This limited warranty replaces all other expressed or implied warranties and constitutes RiverRun Cabinetry's entire liability and the exclusive remedy for any breach. RiverRun Cabinetry shall not be liable for incidental or consequential damages. Some states do not allow the exclusion or limitation of such damages, so this limitation may not apply to you.

Register Your Warranty

Please scan the code to register your five-year RiverRun Cabinetry warranty.

If you are unable to scan the QR code, please contact
Customer Service at **540-438-5973**